TABLE OF CONTENTS

WELCOME ABOARD

CONSUMER INFORMATION

Owner's Packet, Warranty Information, Dealer's Responsibilities, Consumer Responsibilities, Hazard Warning Symbols

CHAPTER 1: BOATING SAFETY

Required Safety Equipment 1-1
Fire Extinguisher 1-1
Personal Flotation 1-1
Sound Signaling Device 1-1
Visual Distress Signals 1-1
Lighting 1-1
Additional Recommended Equipment 1-1
Registration Numbers 1-1
Emergency Stop Switch 1-2
Emergency Information 1-2
Rendering Assistance 1-2
Accident Reporting 1-2
Lightning Precautions 1-2
Boating Safety Tips 1-3
Certification 1-4
Loading Capacity 1-5
Carbon Monoxide 1-5
Suggested Boating Classes and Reading Material 1-6

CHAPTER 2: GENERAL INFORMATION

Fueling 2-1
Pollution Regulations 2-2
Discharge of Oil 2-2
Disposal of Plastics and Other Garbage 2-2
Fuel Select Valve 2-3
Boarding/Stowage 2-3
Driving 2-3
Trailering 2-3
Pre-Start Check List 2-4
Approaching/Leaving the Dock 2-4
Towing or Being Towed 2-4
Shallow Water 2-4
Anchoring 2-5
Windlass 2-5
General Information on Boat Handling 2-6
Twin Engine Boats 2-6
Commonly Used Nautical Terms 2-7

TABLE OF CONTENTS

CHAPTER 3: PERFORMANCE

Performance Factors 3-1
Engine Efficiency 3-1
Weather Conditions 3-1
Load Distribution 3-1
Marine Growth 3-1
Trim 3-1
Propeller 3-2
Propulsion System 3-2
Engine Warranty 3-3
Steering
- Hydraulic Steering 3-3
- Tilt Steering 3-3

Throttle/Shift Control 3-4

CHAPTER 4: GAUGES AND SWITCHES

Mercury and OMC Engine Instrumentation 4-1
- Fuel Gauge 4-1
- Oil Quantity Gauge 4-1
- Tachometer 4-1
- Trim Gauge 4-1
- Voltmeter 4-1
- Water Pressure Gauge (OMC rig only) 4-2
- Water Temperature Gauge (Mercury rig only) 4-2
- Water Temperature, Oil Level, and Fuel System Warning 4-2

Yamaha Engine Instrumentation 4-2
- Digital Speedometer 4-2
- Digital Tachometer 4-3
- Digital Fuel Management Gauge 4-3

Switch Panel 4-4
- Bilge Pump 4-4
- Cockpit Lights 4-4
- Fuel 4-4
- Horn 4-4
- Livewell 4-4
- Washdown 4-4
- Navigational/Anchor Lights 4-4
- Primer Pump Switch 4-4
- Wipers 4-5
- Accessory 4-5

CHAPTER 5: MAINTENANCE AND SERVICE

General 5-1
Exterior Fiberglass Finish 5-1
Maintenance 5-1
Cleaning 5-1
Waxing 5-1
Repairing 5-2
Bottom Paint 5-3
Canvas 5-3
Maintenance 5-3
Snaps 5-3
Vinyl 5-4
Storage 5-4
Upholstery 5-4
Duratrim/Polyethylene/Plexiglas 5-4
Hardware Mounting 5-5
Caulking/Gasket 5-5
Stainless Steel Rails & Hardware/Hardtop Frame 5-5
Maintenance 5-5
Fuel System Maintenance 5-5
Fuel Tank Compartment 5-5
Required Maintenance Procedure for Anodized Aluminum Components 5-6
Shower Sump 5-6
Scuppers 5-6
Batteries 5-7
Light Bulb Replacement Guide 5-8
Accessory Wiring Color Code and Fuse Chart 5-9
Typical Outboard Switch Panel Wiring Diagram 5-10

CHAPTER 6: WINTERIZATION AND STORAGE

General 6-1
Boat Storage 6-1
Cleaning and Lubricating the Boat 6-2
Draining and Water Systems 6-2
Head System 6-2
Fuel System 6-3
Batteries 6-3
Engines 6-3
Storage Checklist 6-3
Getting Boat Out After Storage 6-4
Prior to Launching 6-4
After Launching 6-4

CHAPTER 7: MODEL-SPECIFIC INFORMATION

TABLE OF CONTENTS PAGE 7-1
(Model Specific Information Regarding Your Grady-White Boat)

WARRANTY

TRANSFERRABLE WARRANTY

CHAPTER 1
REQUIRED SAFETY EQUIPMENT

The US Coast Guard (USCG) requires that every boat have specific equipment on board. Check with local regulations on mandatory equipment apart from the list of Coast Guard requirements. See *Sportfish, Cruisers, Yachts Owner's Manual,* page 17, for details on the following required safety equipment.

- **FIRE EXTINGUISHER**

  Boats should be equipped with a marine approved fire extinguisher.
- **PERSONAL FLOTATION**

  All passengers must have an USCG approved personal flotation device (PFD).

  Children and non-swimmers are advised to wear a PFD at all times.
- **SOUND SIGNALING DEVICE (HORN, BELL OR WHISTLE)**

  Your Grady-White is equipped with a horn that meets USCG requirements.
- **VISUAL DISTRESS SIGNALS**

  USCG approved visual distress signals are required on U. S. waters.
- **LIGHTING**

  Grady-White boats are equipped with navigational lights that meet requirements for inland and international waters.

ADDITIONAL RECOMMENDED EQUIPMENT

In addition to the required safety equipment there are additional items that will provide an extra margin of safety and convenience for you and your passengers while boating. For an extended list of basic gear, tools and spare parts reference the pamphlet *Sportfish, Cruisers, Yachts Owner's Manual* enclosed with this manual.

Keep tools and spare parts in good condition. Replace parts removed from spare parts kit. Most importantly use US Coast Guard approved or marine certified parts where applicable. Conditions found requiring corrective action should be worked on by a qualified repairman.

REGISTRATION NUMBERS

Federal and State laws require a powerboat to be registered in the State where it is primarily used. Registration numbers and validation stickers must be displayed according to regulations. The registration certificate must be on board when boating. The boat serial number or Hull Identification Number (HIN) is required on the registration form. The HIN is located on the upper right hand corner of the transom and is the most important identifying factor. The HIN should be included on all documents and any correspondence to provide you timely service.

EMERGENCY STOP SWITCH

Some Grady-Whites are equipped with an emergency stop switch. This is a safety feature that if used properly will shut the engines down if the operator leaves or falls from the helm position. This ignition shutdown switch includes a shut-off switch, switch clip, lanyard and lanyard clip. The lanyard clip is attached to the operator. If a situation arises where the boat should stop, a pull on the cord to release the clip from the shut-off switch will shut down the engines. To reset the emergency stop switch simply reinstall the switch clip. The decision to use the emergency stop switch rests with the owner/driver. See page 72 in *Sportfish, Cruisers, Yachts Owner's Manual.*

EMERGENCY INFORMATION

While boating unpleasant situations may develop. When emergency situations materialize you should prepare yourself on how to cope with them whether they happen aboard your vessel or someone else's. Anticipate a gameplan for specific situations such as fire, man overboard or collision etc., to give you the confidence and ability necessary for an emergency. The key is to remain calm. For emergency procedures, see Section 4 in *Sportfish, Cruisers, Yachts Owner's Manual.*

- RENDERING ASSISTANCE
  The owner or operator of a vessel is required by law to render all practical or necessary to any person or vessel affected by collision, accident or casualty. **However, you are not required to endanger your vessel or passengers to render assistance**.
- ACCIDENT REPORTING
  Report all boating accidents to your local authorities. Federal regulations require boat operators that are involved in an accident to submit a written report within 48 hours. **In the event of death or disappearance, notification is required immediately** by phone or radio in addition to the written report. These reports can be submitted to the State Boating Law Administrator. Forms can be obtained through the USCG, local harbor patrol offices, sheriff and police stations.
- LIGHTNING PRECAUTIONS
  This awareness is included to ensure the safety of the owner and passengers. Always be mindful of the weather! When a lightning storm advances certain safety precautions should be taken. Dock the boat and seek shelter on land. If this is not possible seek refuge inside the boat until the storm has passed. **Stay out of the water!** Lightning will seek a ground when it strikes and may pass through metal components if it hits your boat. For this reason avoid contact with metal parts of the boat under these conditions.

BOATING SAFETY TIPS

Safety is an important aspect of boating. Your safety as well as the safety of your passengers and vessel is your responsibilities. The following precautions and the ones mentioned in *Sportfish, Cruisers, Yachts Owner's Manual* will add to you and your passengers' boating safety and pleasure.

- Before operating your Grady-White **READ AND STUDY ALL OPERATION AND MAINTENANCE MANUALS**. It is important that you fully understand how to use your boat. Contact your Grady-White dealer for questions. Proper use and service will insure quality performance and longevity of your boat.

- A written float plan left with a RESPONSIBLE person can serve as valuable information should you not return as scheduled. Upon returning your primary responsibility is to notify the person of your return.
- *NEVER* operate or allow anyone to operate your boat while under the influence of drugs or alcohol.
- **Individuals under the age of 16 should not be allowed to operate your boat. Inexperienced drivers should have constant and direct supervision.**
- Instruct at least one passenger on the fundamentals of basic boating and safe operation in the event of an emergency.
- While boating passengers should be settled in a safe position. Use hand holds and rails for steadiness. Do not allow bow, transom or gunwale riding. Remember, the captain is ultimately responsible for the safety of the passengers aboard their vessel.
- Keep your boat speed under control. Respect for other boaters and those on shore are common courtesy. The boats' operator is responsible for injury or damage caused by the boat or the wake. Your wake could swamp a smaller craft and endanger its passengers. Stay alert for posted **"No Wake Zones"**.
- Become familiar with the handling personality and limitations of your boat.
- **Never allow swimmers/skiers to enter or exit the boat with engines running**. A shift lever in neutral could become engaged accidentally.
- Obtain information and a chart for new areas when possible.
- Clean water and air are responsibilities for all persons. Use litter containers on board and dispose of refuse properly. See discharge regulations in next section.
- Know and obey the "Rules of the Road". See *Sportfish, Cruisers, Yachts Owner's Manual,* page 19, for a better understanding of right of ways, signals and waterway markers.

CERTIFICATION

At the helm station, you will find a NMMA (National Marine Manufacturers Association) Yacht Certification tag. This means your yacht complies with the Coast Guard safety standards. (NOTE: Any boat with an overall length of 26 feet or greater is defined as a "yacht" by NMMA.)

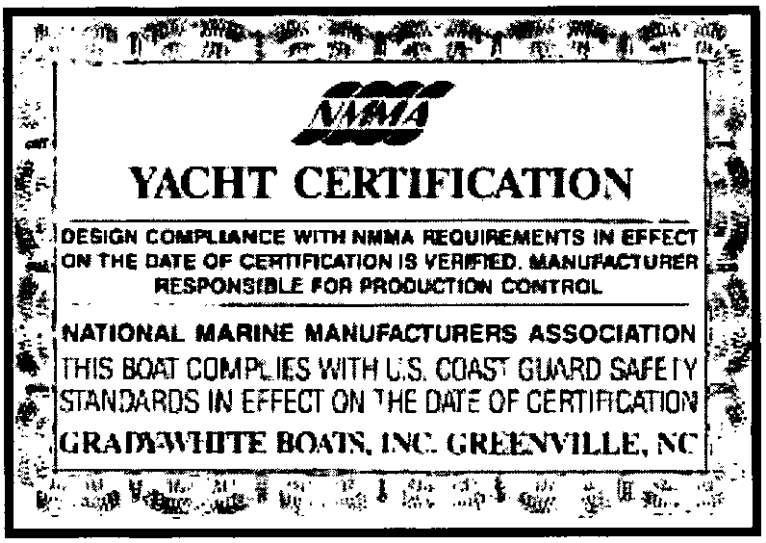

This label means that your Grady-White is certified by the NMMA. With this tag, you are assured that your fuel system, electrical system, lighting, ventilation, and steering, are not only in compliance with the US Coast Guard regulations, but also meet the more stringent standards of the NMMA. The NMMA is a national trade organization serving all elements of the recreational boating industry, including manufacturers of boating equipment. With this tag, you can have confidence in the safety of your boat.

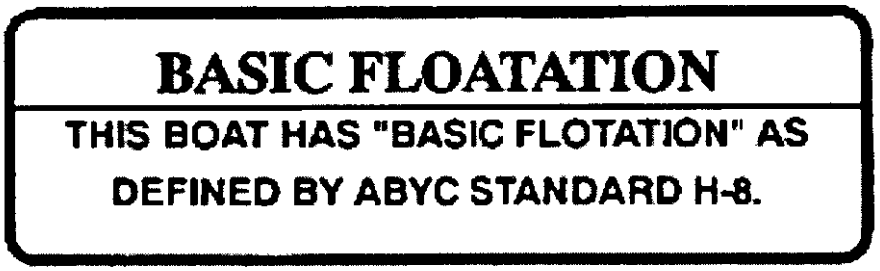

This label means that Grady-White has designed and built your boat to the ABYC basic flotation standard H-8. Basic flotation is defined as having enough foam, in the boat, to create buoyancy and prevent sinking under swamped conditions.

LOADING CAPACITY

Though overloading is a primary cause of many boating accidents, improper loading is equally hazardous. Boaters should know the amount of weight on board and evenly **distribute** the weight within the boat.

CARBON MONOXIDE

⚠ DANGER

(CO) IS PRODUCED BY ALL GASOLINE ENGINES AND GENERATOR SETS. KEEP COCKPIT AND CABIN AREAS WELL VENTILATED AND AVOID BLOCKAGE OF EXHAUST OUTLETS. EXTENDED EXPOSURE TO (CO) CAN CAUSE BRAIN DAMAGE OR DEATH.

Carbon Monoxide, commonly written (CO), is a colorless, odorless gas emitted from any boat's exhaust. The gas is similar in weight to the air we breathe; therefore, it cannot be expected to rise or fall, but will accumulate in confined spaces.

Carbon monoxide is **poisonous**, and potentially **fatal** if breathed over an extended period of time. Symptoms of CO poisoning include: dizziness, nausea, headache, sleepiness, vomiting, throbbing in the temples, muscular twitching and an inability to think clearly. **If you or anyone else experience these symptoms, immediately get away from fumes and into an area where plenty of FRESH air can be consumed. If any symptoms from above persist, seek medical attention.**

Carbon monoxide can accumulate in cabins and under canvas. If your boat is equipped with a canvas that encloses the aft cockpit and propulsion equipment, do not operate the boat with this canvas closed.

Operators need to be aware of the influence of other boats on their vessel, as well as, the effects they have on neighboring crafts. Of primary concern is the operation of an auxiliary generator with boats moored along side each other. This situation creates an atmosphere which is filled with CO, and extremely dangerous.

⚠ WARNING

***BE AWARE* of the affect your exhaust may have on other vessels. Likewise, *BE AWARE* that the operation of other vessel's equipment may influence the carbon monoxide concentration on *your* vessel.**

⚠ WARNING

EXHAUST FUMES FROM ENGINES CONTAIN (CO). BOATS WITH CANVAS DEPLOYED ARE MORE LIKELY TO COLLECT EXHAUST FUMES. KEEP COCKPIT AND CABIN AREAS WELL VENTILATED.

SUGGESTED BOATING CLASSES AND READING MATERIAL

Like a car, boats must be operated according to safety rules and traffic regulations. Although we include some basic boating tips in this manual, a thorough review of the safety rules and regulations for boating is beyond the scope of this text.

We support the work of the United States Coast Guard Auxiliary and the United States Power Squadrons. We urge you to exercise the opportunity to attend any instructional classes sponsored by these organizations. Reference page 8 of *Sportfish, Cruisers, Yachts Owner's Manual* for training options and page 23 for information on charts and maps. For further knowledge on boating we advise that you review the following publications.

- **PILOTING, SEAMANSHIP AND SMALL BOAT HANDLING**
  (Chapman)*
  Motor Boating and Sailing
  Post Office Box 2319 -- F.D.R. Station
  New York, New York 10022
  *Available on CD ROM

- **PLEASURE BOATING AND SEAMANSHIP**
  US Coast Guard Auxiliary
  306 Wilson Road Oaklands
  Newark, Delaware 19711

- **BOATMAN'S HANDBOOK**
  by Tom Bottomly
  Motor Boating and Sailing
  Post Office Box 2319 -- F.D.R. Station
  New York, New York 10022

FOR MORE INFORMATION ON BOATING SAFETY COURSES IN YOUR AREA CALL

- BOATING EDUCATION HOTLINE.....1-800-336-BOAT (2628),
- US COAST GUARD BOATING HOTLINE .....1-800-368-5647 or
- CONTACT YOUR LOCAL COAST GUARD.

CHAPTER 2
GENERAL INFORMATION

FUELING

WARNING

Safety during fueling requires CAUTION and COMMON SENSE.

Please study the following precautions carefully, and consult your dealer if you have any questions. Prior to your initial fill-up, check your engine manual to confirm the type of fuel specified by the manufacturer. Never use fuels containing alcohol. The alcohol can deteriorate the rubber materials used to make up your fueling system. Methanol based fuels absorb water, making fuel more corrosive to the metals in tanks and carburetors. For outboards with an oil injection system check the engine manual for the approved type of oil and fill the tank completely.

BEFORE FUELING

- Shut down all engines.
- Turn battery select switch(es) to "OFF" to insure that all fans, lights, etc. are off
- Close all ports, hatches, windows and engine compartments to prevent fumes from accumulating in closed areas.
- Extinguish cigarettes and all other lighted materials.
- Have a fire extinguisher near.

DURING FUELING

- Observe all safety regulations for the safe handling of fuel.
- Keep the fuel supply nozzle in contact with the fuel tank opening to prevent any static sparks.

AFTER FUELING

- Secure the fuel cap and check fuel lines and connections for leakage. Wash and clean up any spilled fuel. Dispose of clean up rags or sponges on shore. Do not store these clean up rags in the boat.
- After fueling ventilate all ports, windows, hatches and other closed areas. Conduct a "sniff test" to make certain all fumes are vacant before using the battery select switch(es).
- Select your first tank cautiously. Take into consideration the distribution of your load as fuel is consumed. Performance will be influenced by weight distribution. If your boat is equipped with two fuel tanks use the fuel select valve (see FUEL SELECT VALVE on page 2-3) to select the proper tank.

See warnings and check list in Section 6, page 37 of the *Sportfish, Cruisers, and Yachts Owner's Manual*. Reference the Fuel Tank Compartment section under Maintenance for more information on cleaning the fuel storage area.

FUEL SYSTEM

After fueling, inspect the fuel hoses, connections and tanks for tightness, signs of leaks and deterioration. Annually conduct a more detailed inspection of fuel system components, especially those hidden from routine inspection. Replace deteriorated hoses, clamps, connections or fittings immediately.

If you are experiencing fuel flow problems there is a simple method to determine if the problem is in your fuel system or your engine. Connect a six-gallon portable tank to your engine. If the problem persists the likely cause is with the engine(s) itself. If the problem goes away the source must be in the boat fuel system. One component that should be inspected if a restriction occurs is the anti-siphon valve. If fuel does not flow properly through this part it must be cleaned and/or replaced. DO NOT remove the anti-siphon valve and replace with a regular barb.

WARNING

LEAKING FUEL IS A FIRE AND EXPLOSION HAZARD. INSPECT SYSTEM REGULARLY. EXAMINE FUEL SYSTEM FOR LEAKS OR CORROSION AT LEAST ANNUALLY.

© NMMA 1990/ NO. 200

FUEL SELECT VALVE

If your boat is equipped with dual fuel tanks you will have a manual fuel select valve installed. This valve allows you to choose from which tank fuel will be consumed. Remember, as the fuel is consumed and the fuel load redistributes the performance will be influenced. Select the tank that allows the best performance for your boat.

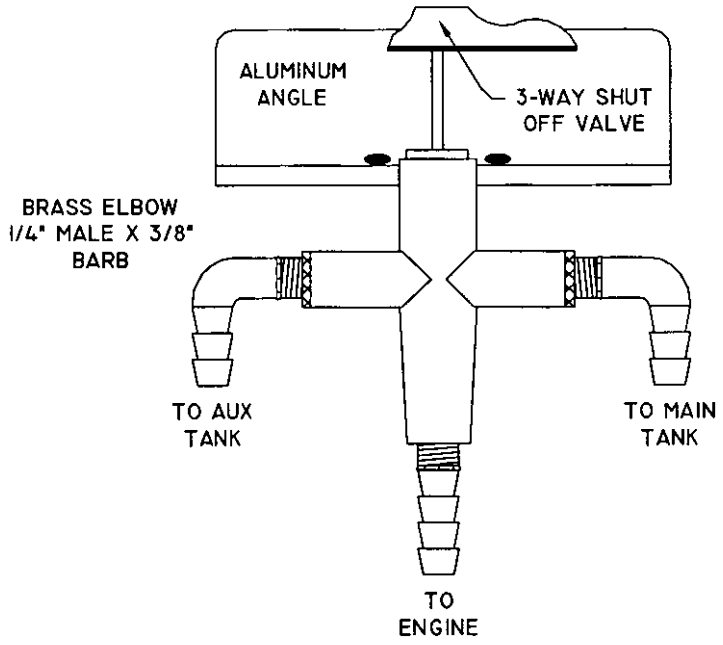

POLLUTION REGULATIONS

The U.S. Coast Guard defines restrictions on the discharge of oil or hazardous substances, and plastics or garbage in the "Federal Requirements for Boating and Boating safety". You should have received this pamphlet when you registered your boat. Detailed below is a summary of those regulations; however, you should read the pamphlet and also become familiar with any local restrictions where you operate your vessel. Passengers or crew members aboard your boat should also be notified of these regulations.

DISCHARGE OF OIL OR HAZARDOUS SUBSTANCES

The Federal Water Pollution Control Act prohibits the discharge of oil or hazardous substances which may be harmful, into or upon U.S. navigable waters. Vessels 26 feet in length or over must display a placard at least 5" x 8" in a visible location in the bilge or near the bilge pump controls. The placard should state the following:

DISCHARGE OF OIL PROHIBITED

THE FEDERAL WATER POLLUTION CONTROL ACT PROHIBITS THE DISCHARGE OF OIL OR OILY WASTE UPON OR INTO ANY NAVIGABLE WATERS OF THE U.S. THE PROHIBITION INCLUDES ANY DISCHARGE WHICH CAUSES A FILM OR DISCOLORATION ON THE SURFACE OF THE WATER OR CAUSES A SLUDGE OR EMULSION BENEATH THE SURFACE OF THE WATER. VIOLATORS ARE SUBJECT TO SUBSTANTIAL CIVIL AND/OR CRIMINAL SANCTIONS INCLUDING FINES OR IMPRISONMENT.

DISPOSAL OF PLASTICS OR GARBAGE

The MARPOL ANNEX V is the Act to prevent pollution from ships and other vessels. Federal regulations prohibit the discharge of plastic garbage anywhere in the marine environment. Plastic includes but is not limited to: synthetic fishing nets, ropes, lines, straws, six pack holders, styrofoam cups and lids, bottles, buckets and plastic bags. These regulations also restrict the disposal of other types of garbage within specified boundaries from shore. The following plaque will help you determine the specific distances offshore that certain garbage is permitted.

*It is illegal for any vessel to dump plastic trash **anywhere** in the ocean or navigable waters of the United States. Annex V of the MARPOL TREATY is an International Law for a cleaner, safer marine environment. Violation of these requirements may result in civil penalty up to $25,000, fine and imprisonment.**

U.S. Lakes, Rivers, Bays, Sounds and 3 miles from shore

ILLEGAL TO DUMP

Plastic & Garbage

Paper, Rags, Glass, Food, Metal, Crockery, Dunnage

3 to 12 miles

ILLEGAL TO DUMP

Plastic

Dunnage, lining & packing materials that float, also if not ground to less than one inch:

Paper, Rags, Glass, Crockery, Metal, Food

12 to 25 miles

ILLEGAL TO DUMP

Plastic

Dunnage, lining & packing materials that float

Outside 25 miles

ILLEGAL TO DUMP

Plastic

*UP TO $50,000 AND 5 YRS.

State and local regulations may further restrict the disposal of garbage.

TRAILERING

The adjustment and balance of your boat on the trailer determines how easily your boat may be transported. The tongue weight on the hitch ball should be 5-10% of the total weight of your boat, motor and trailer. Tail-heavy loads cause swaying while trailering. The rollers and/or bunkers of your trailer should be adjusted so that the weight is distributed evenly across the stern and forward throughout the keel sections. Your dealer is capable of adjusting your trailer properly.

Practice maneuvering the trailer. The trailer always backs in the opposite direction of the vehicle. To maneuver the trailer, turn the steering wheel in the direction you want the trailer to go. Prior to initial launch familiarize yourself with this manual and all aspects of your boat. At the launch site go through a pre-launch checklist. The list should be suited to your specific needs.

Trailering and relative information is provided in the *Sportfish, Cruisers, and Yachts Owner's Manual* in Section 9, page 94.

PRE-START CHECKLIST

Sportfish, Cruisers, and Yachts Owner's Manual provides a checklist for predeparture on page 35.

APPROACHING/LEAVING THE DOCK

Unlike an automobile, the stern of your boat reacts first when turning. A turn to the right will swing the stern to the left and vice-versa. Remember that turning your boat away from an object such as a dock will tend to swing the stern toward that object. See Docking in your publication of *Sportfish, Cruisers, and Yachts Owner's Manual.*

TOWING

In the event of a mishap or power loss you may need to tow a boat or have yours towed. Remember you should not tow a boat larger than your own. Never tow a boat if you are not equipped with the proper lines. Nylon ropes are recommended. They have the strength and elasticity needed to absorb the shock of towing and sudden jerks. Individual should never hold a towline, always secure it to the boat.

Before towing a boat, make a bridle and tie it securely to the pad eyes on the transom with enough slack to clear the engines. Pad the line wherever it comes into contact with the boat to prevent chafing. Attach a tow line to the bridle so that it can slide from side to side to prevent too much pressure on a single pad eye. The tow line should then be attached to the bow eye or to a bridle on the towed boat. The tow line should be a minimum of twice the length of the towing boat, the longer the better. When passing the towline to the other boat do not try to run in too close. Send either a light line or attach the towline to a life preserver to be pulled in. Be aware of the other boat's propeller.

The towed boat should always have someone at the wheel since the boat may swing off course. Start the tow off slowly. A steady pull at a moderate speed should be used. It is important to keep the slack out of the propeller area. Watch the action of the towing boat. If excessive slack develops in the towline and contact is obvious turn in either direction to avoid hitting the stern.

WARNING

As a precaution passengers on both boats should stay clear of the towline, lines under stress could snap and fly in either direction causing injury.

SHALLOW WATER

Most boats that becomes grounded can be floated off with motors tilted to reduce the draft at the transom. Do not try to power off if the propellers are in mud or sand due to possible damage to your engine's cooling system. With motors tilted, try rocking the boat from side to side to break the suction of mud from the keel. Move passengers or heavy objects from the point where the boat is grounded. Do not lower or start the engines until the boat is clear of the ground. Refer to shallow water in *Sportfish, Cruisers, and Yachts Owner's Manual.*

When boating in water with tidal changes be mindful of water level fluctuations. If you are grounded on an incoming tide you can wait until the tide is high enough to refloat your boat. However, on an outgoing tide quick action should be taken to refloat your boat. If this is not possible set an anchor to keep the boat from becoming driven further aground. Set the anchor to counter the action of the wind or current. The anchor, in some cases, can also be used to pull the boat free.

Many inland areas have rocks and stumps which could crack or puncture a fiberglass hull. Be familiar with the boating area and use caution in shallow water.

ANCHORING

Some factors that determine the size and type of anchor most suitable for your boat include the size of your boat and the type of lake, sea or river bottom in your boating area. See page 46 in *Sportfish, Cruisers, and Yachts Owner's Manual* for more information on anchoring.

NOTICE

It is illegal to tie your boat to navigational aids such as buoys and markers.

⚠ WARNING

Never anchor off the stern of the boat especially in strong winds or currents. The weight of the stern and flat surface to the seas can easily cause water to enter over the transom and swamp the boat.

WINDLASS

Anchoring can be less laborious if your boat has a windlass accessory. If your boat is equipped with a windlass reference your windlass Operation Manual for instructions.

GENERAL INFORMATION ON BOAT HANDLING

The best method of learning how to handle and obtain the best performance from your boat is to practice and experiment. After several hours of operation you should experiment with the throttle settings to discover the setting that will be the most comfortable and economical range for your particular loading conditions.

We suggest that you make a speed/RPM chart in order to obtain the most economical operation. Operate the boat at various speeds and check the fuel consumption. Determine the amount of operating time remaining when the fuel gauge drops into the red band. Make a log of this type of information and have it available when using your boat. Other statistics you may want to determine could include the following:

- Minimum speed for effective steering.
- Turning radius at different speeds.
- Response to steering at low speeds.
- Acceleration and declaration rates.
- Time and distance to bring the boat to a stop at different speeds.
- Control of the boat using both engines in close quarters.

Also read the section in *Sportfish, Cruisers, and Yachts Owner's Manual* for information on safe operating speed.

TWIN ENGINE BOATS

Twin engine boats are easy to maneuver. The boat will run ahead or backward in a straight line when both engines are working together at the same speed. When backing the engines can be used to steer to port as well as starboard.

Moving ahead on one engine will cause the bow to swing away from the running engine side and move forward at the same time. Backing up with one engine will cause the bow to swing toward the running engine side and the boat to move backward.

Running one engine ahead and one engine astern will cause the boat to turn end-for-end in little more than its own length.

Running both engines in the same direction at different speeds will cause the boat to move in the direction dictated by the faster engine but its influence will be modified by the slower engine.

COMMONLY USED NAUTICAL TERMS

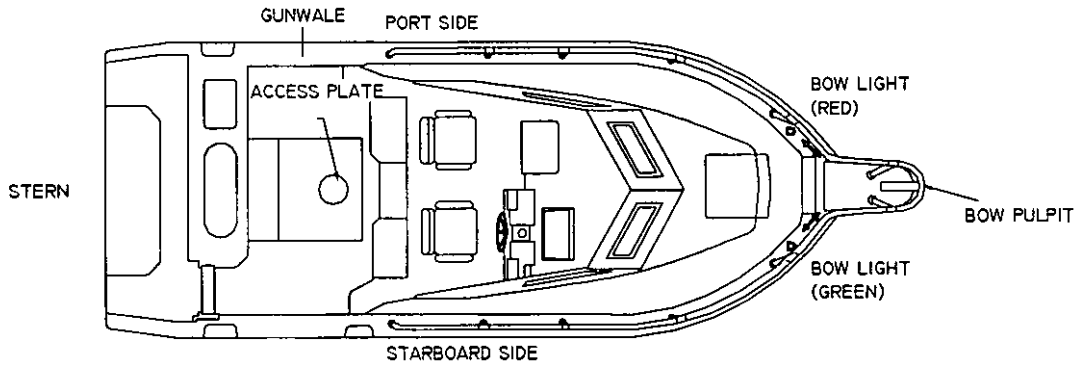

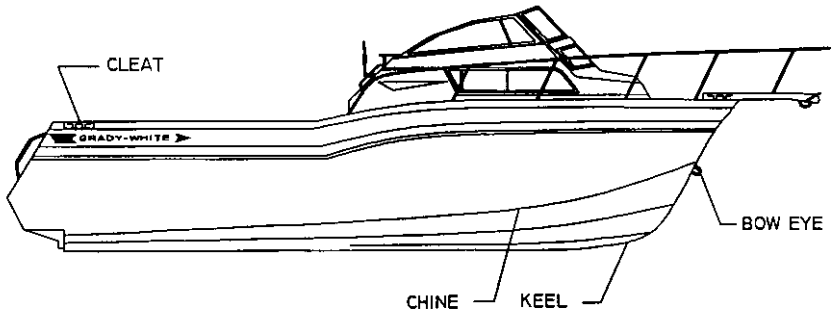

ABEAM - a line perpendicular to a boat's keel

ACCESS PLATE - a removable, watertight cover that provides quick entry to enclosed areas for maintenance or visual inspection.

AFT - toward the rear or stern of the boat

BEAM - the greatest width of the boat

BILGE - the lower interior area of the hull

BOW - the forward section of the boat

BOW EYE - a U-shaped hull fitting used to attach the trailer winch to the boat

BULKHEAD - vertical partition in the boat

CHINE - point where the topside and bottom of the boat join

CLEAT - deck fitting with arms or horns on which lines are fastened

DECK - upper structure which covers the hull

DRAFT - depth of water required to float a boat

FATHOM - a depth measurement equal to six feet

FREEBOARD - distance measured between waterline and deck

GUNWALE (GUNNEL) - point where the deck and hull join

HATCH - an opening in the deck to provide access below

HEADROOM - vertical distance between the deck and cabin or canopy ceiling

HULL - major component that provides a watertight platform bouyant enough to float a craft and its load

KEEL - the major longitudinal member of a hull -the lowest external portion of the boat

KNOT - a measurement of speed eqaul to nautical miles per hour

LEE - the side that is sheltered from the wind

LIST - a tilt or lean to one side

PORT - a term designating the left side of the boat when facing forward

SCUPPER - holes permitting water to drain overboard from deck to cockpit

SHEER - curve or sweep of the deck as viewed from the side

STARBOARD - a term designating the right side of the boat when facing forward

STERN - rear of the boat

STRINGER - longitudinal members fastened inside the hull to add rigidity and strength

WAKE - the movement of water created by a moving boat

WINDWARD - side facing the direction of the wind (against the wind)

CHAPTER 3
PERFORMANCE

PERFORMANCE FACTORS

Maximum performance is dependent on many factors and cannot be guaranteed. These factors will vary with changing conditions. Some of these factors are listed below. Reference the trouble shooting guide, page 65, in *Sportfish, Cruisers, Yachts Owner's Manual* for additional suggestions on adjusting performance.

ENGINE EFFICIENCY

Engines operate most efficiently at the RPM confirmed in the engine Operating Manuals assuming your boat is equipped with the correct engines, the engines are properly tuned and the drive systems are in good condition. Efficiency will decrease if normal care and maintenance is not performed. If engines are neglected power will drop and speed will decrease. In addition, expensive repairs may become necessary. Be sure to follow all instructions in the engine Operation Manuals.

WEATHER CONDITIONS

Weather conditions affect engine performance. Barometric pressure and humidity both influence horsepower. A change of weather could cause a 10% loss in horse power on some hot days.

LOAD DISTRIBUTION

A decrease in performance will be noted when gear, equipment, passengers and fuel are added. This type of extra load will affect the performance of the boat according to the distribution of the weight. Water accumulation in the bilge, another type of extra load, will affect performance. Keep the bilge dry to eliminate this problem.

MARINE GROWTH

Maximum performance is obtained only when your hull bottom is clean. Marine growth on the bottom of the boat will increase resistance and decrease speed. These conditions will also increase fuel consumption.

TRIM

Most outboard models are equipped with power tilt and trim mechanisms. The purpose of power tilt is to raise the engine for launching, loading or trailering your boat. Power trim may be used to adjust the boats planing performance and running attitude. Power trim is covered in detail in *Sportfish, Cruisers, Yachts Owner's Manual.*

Trim refers both to the weight distributions inside the boat and to the angle of thrust of the drive unit. The angle of thrust of the drive unit forces the bow up or down. The trim tabs on your boat also control the trim of the boat, similar to the power trim. Refer to the Trim Tabs section in Chapter 7 for additional information.

PERFORMANCE

PROPELLER

The condition of your prop has a major influence on the performance of your boat. Your engines should be equipped with the best size prop for normal conditions. Unusual uses or weight conditions may require special props. A damaged prop can affect your boat's top speed, cause vibrations, create a sudden drop in RPMs or even increase fuel consumption

⚠ CAUTION

Stay within the engine manufacturer's maximum and minimum RPM ranges when replacing props. This information is located in your engine Manuals. If your boat does not have a tachometer consult your dealer for propeller changes.

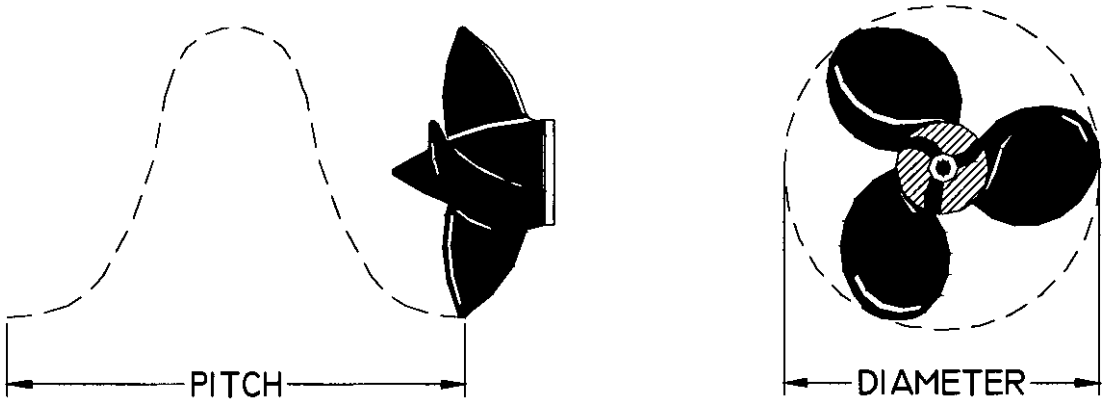

Pitch = 17 **Diameter = 14**

Pitch and Diameter are the two basic dimensions of a propeller.
Example of propeller dimension: 14 x 17

PROPULSION SYSTEM

- OUTBOARD

  The engine manufacturer supplies all vital information concerning your engines in the Operation and Maintenance Manuals. Details of important engine functions such as the lubrication system, cooling system and alarm/monitoring system are outlined in these manuals. Your familiarization with this engine reference material will result in the proper usage and service that is essential for safe and enduring engine performance. These manuals are included with the Owner's Packet.

DO NOT INHALE EXHAUST FUMES! EXHAUST CONTAINS CARBON MONOXIDE A DANGEROUS GAS WHICH IS POTENTIALLY LETHAL.

⚠ WARNING

Do not attempt to service any engine or drive component without being totally familiar with the safe and proper service procedures. Certain moving parts are exposed and can be dangerous.

⚠ CAUTION

Do not paint the outboard motors with anti-fouling paints designed for boat hulls. Many of these paints can cause severe damage to the engines.

ENGINE WARRANTY

A warranty registration card is included with all engine manuals and should be completed and returned to the engine manufacturer as soon as possible.

STEERING

Most outboard engines are equipped with an adjustable rudder trim tab. This trim tab should be adjusted to balance the steering at the speed which you travel most frequently. Variations in speed, boat load or changes in the engine trim will cause the steering to pull in one direction. If the boat pulls to the left adjust the trim tab to the left and vice-versa.

- **HYDRAULIC STEERING**

  Hydraulic steering systems (not to be confused with power steering) require regular preventative maintenance for continued safe and reliable operation. The oil level in the helm pump must be maintained within acceptable operating levels. A low oil level will cause air to be introduced into the steering system and result in unresponsive steering. The oil level should always be within 1/2 inch from the base of the fill hole located on the front top portion of the helm pump. Check the entire steering system regularly for oil leaks. Unobserved leaks over a period of time will result in unresponsive steering or loss of steering.

  Any moving mechanical linkages, sliders, etc. should be greased as needed with a high quality marine grease. Refer to the manufacturer's steering manual for specific recommendations and additional maintenance.

  Any slow or sudden change in the "feel" of your steering system indicates an immediate need for a thorough inspection. All repairs and replacements to steering systems should be made by an authorized repairman.

- **TILT STEERING**

  Tilt steering is available as an optional feature. This feature enables the operator to tilt the wheel up or down. Refer to the steering system Owner's Manual for information on oil levels with tilt steering.

THROTTLE/SHIFT CONTROL

The throttle/shift controls located at the helm station, control the flow of fuel to the engine and act as gear shift levers to control the forward and aft thrust of the propellers.

The middle position of the throttle control is usually the neutral position. Move the control forward to engage the shifting mechanism which creates a forward thrust of the propeller. Advance the forward movement to increase the fuel flow to the engine and boost the forward lunge.

Move the control lever aft of the neutral position to reverse the shift mechanism and create a reverse thrust of the propeller. Increase the aft movement to increase the reverse thrust. Remember that propellers are designed for maximum forward thrust so reverse thrust will not be as efficient.

All controls have a neutral safety mechanism. This mechanism will not allow the engine to start when the control is in gear. To increase the flow of fuel to the engine while remaining in the neutral position you may use the neutral lock out feature on the control handle.

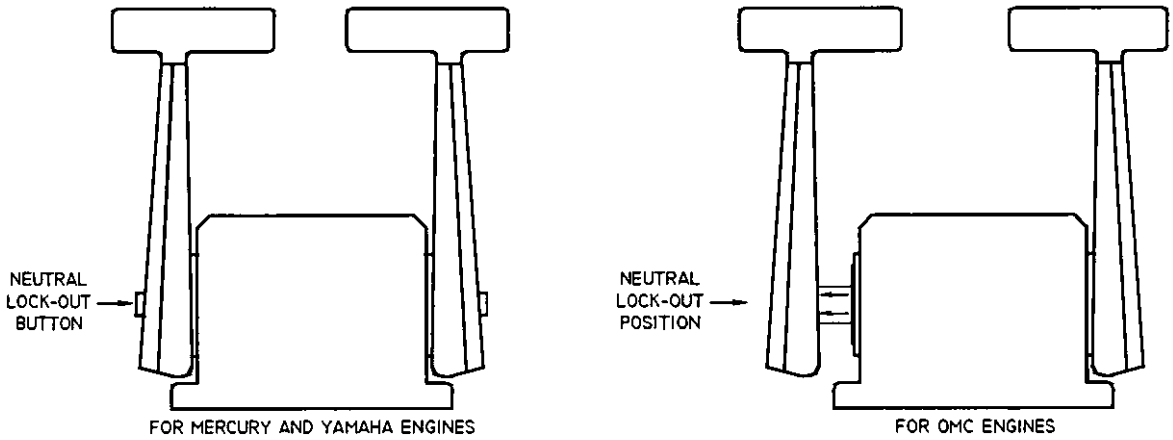

To stop a boat that is moving forward you may reverse the shift mechanism. This change in direction will provide a "braking action," slowing the boat.

⚠ CAUTION

THE BRAKING ACTION CAUSES A WAKE WHICH MAY WASH OVER THE TRANSOM AND FLOOD THE BOAT IF THE VESSEL IS MOVING TOO FAST. ALLOW ENGINE RPMs TO DECREASE BEFORE SHIFTING INTO REVERSE.

If your throttle or shift cables need replacing use the same style and length as the original equipment.

CHAPTER 4
GAUGES AND SWITCHES

MERCURY AND OMC ENGINE INSTRUMENTATION

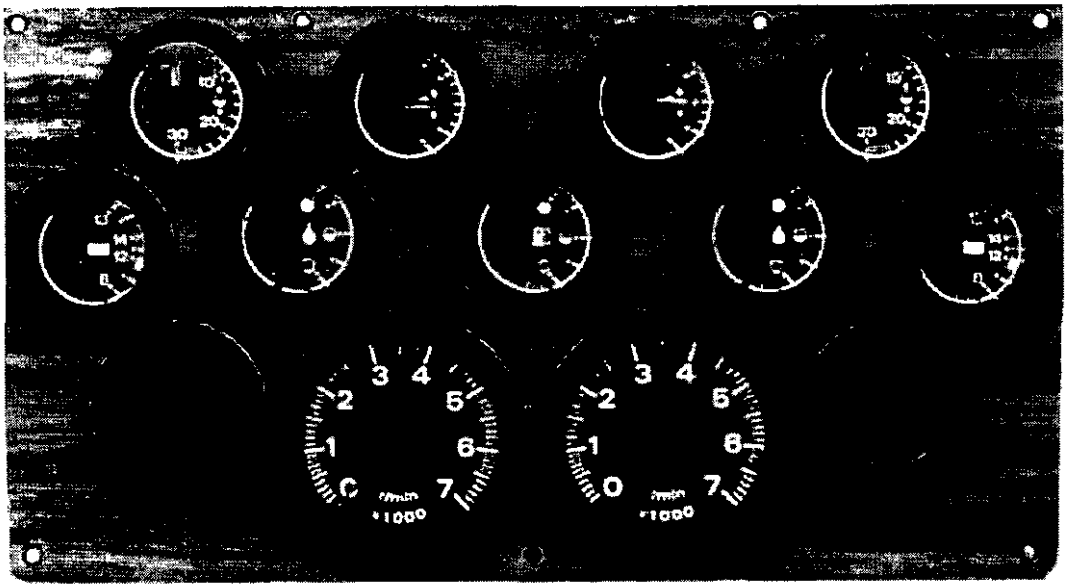

- **FUEL GAUGE**

  The fuel gauge indicates the fuel level. When reading this gauge remember two things: (1) the accuracy of your gauge varies with the attitude of your boat in the water (trim or list), (2) the fuel pickup tube inside the gas tank is not capable of withdrawing all of the fuel from the tank. For these reasons never operate your boat at extremely low fuel levels.

- **OIL QUANTITY GAUGE**

  OMC and Mercury pre-rigs are equipped with an oil quantity gauge that indicates the oil level in the tank.

- **TACHOMETER GAUGE**

  The tachometer indicates engine revolutions per minute (RPMs). Consult your engine Owner's Manual for the recommended operating RPM range.

- **TRIM GAUGE**

  The trim gauge indicates the angle of thrust of the lower unit of the engines.

- **VOLTMETER**

  The voltmeter indicates the battery charge with the engines off and the charging system output with the engine running. A reading of 12 or 13 volts with the engines off is normal indicating a fully-charged battery. Readings below 11 indicate a weak battery which may not start the engine(s). A reading of 13 to 15 volts when the engine is running is normal. Readings over 15 volts may indicate regulator problems. Low or fluctuating readings may indicate loose connections or trouble in the regulator and alternator circuit.

- **WATER PRESSURE GAUGE (OMC RIG ONLY)**

  The water pressure gauge indicates the water pressure in the engine cooling system. Readings help determine if water pressure is too low for adequate cooling. See the engine Owner's Manual for recommended operating range.

GAUGES AND SWITCHES

- **WATER TEMPERATURE GAUGE (MERCURY RIG ONLY)**

  This gauge indicates the temperature of the cooling water circulating through the engine. When the temperature exceeds the recommended operating range for your engine immediately shut off the engine to prevent damage. Overheating is often caused by obstruction of your engine's water intake on the lower unit. Check the water intake strainer first if you experience trouble.

- **WATER TEMPERATURE, OIL LEVEL AND FUEL RESTRICTION WARNING SYSTEMS**

  Outboard engines have several warning systems. The buzzer for these systems is located under the dash. Some models also have indicator lights in addition to the audible alarm. The purpose of the buzzer is to alert the driver to potentially damaging engine operating conditions. Consult your engine Owner's Manual for exact location and function of these systems.

YAMAHA ENGINE INSTRUMENTATION

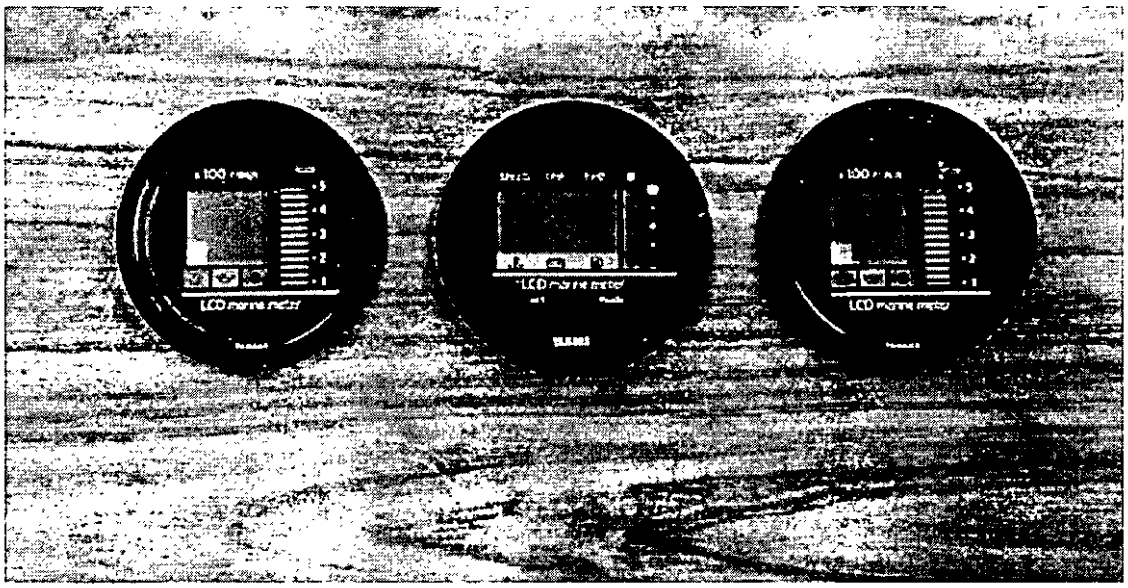

DIGITAL SPEEDOMETER

- **BATTERY VOLTAGE INDICATOR**

  This feature indicates the battery charge when the engine is off and indicates the alternator output when the engine is running. A reading of 12 or 13 volts is normal indicating a fully-charged battery. Readings below 11 indicate a weak battery which may not start the engines. A reading of 13 to 15 volts when the engine is running is normal. Readings over 15 volts may indicate regulator problems. Low or fluctuating readings may indicate loose connections or trouble in the regulator and alternator circuit.

- **CLOCK**

  This feature is battery powered and may need to be reset if the battery select switch is turned to the "off" position.

- **FUEL METER**

  This feature indicates the gas tank fuel level. When reading this gauge remember two things:
  - The accuracy of your gauge varies with the attitude of your boat in the water (trim or list)
  - The fuel pickup tube inside the gas tank is not capable of withdrawing all of the fuel from the tank.

  For these reasons never operate your boat at extremely low fuel levels.
- **LOW FUEL WARNING INDICATOR**

  This feature indicates when the fuel level in the main fuel tank is becoming low.
- **OVERHEAT WARNING INDICATOR**

  This feature indicates when the temperature of the cooling water circulating through the engine is too high. When the temperature exceeds the recommended operating range indicated by your engine owner's manual, immediately shut off your engine to prevent damage. Overheating is often caused by obstruction of your engine's intake on the lower unit. Check the intake strainer first if you experience trouble.
- **SPEEDOMETER**

  This feature indicates boat speed in miles per hour, knots per hour or nautical miles per hour.
- **TRIP METER**

  This feature indicates the distance traveled since the meter was last set.
- **HOUR METER**

  This feature records the cumulative number of hours the motor has been in use.

DIGITAL TACHOMETER

- **OIL LEVEL WARNING LIGHT**

  Refer to your engine owner's manual for information regarding oil level and warning light.
- **REVOLUTIONS PER MINUTE (RPM's)**

  Consult your engine Owner's Manual for the recommended operating RPM range.
- **TRIM**

  This feature indicates the angle of thrust of the lower unit of the engine.

DIGITAL FUEL MANAGEMENT GAUGE

- **ECONOMIZER**

  The economizer feature on the fuel management gauge gives readings in gallons per hour and miles per gallon.
- **SYNCHRONIZER**

  The synchronizer tells the operator when the engines are running at the same RPMs.
- **TOTALIZER**

  The totalizer feature displays the amount of fuel consumed since it was last set. To reset the totalizer press the SET and MODE buttons together.

The digital fuel meter can display information for the port side only, the starboard side only, and then a total consumption. For more detailed information refer to engine Owner's Manual.

SWITCH PANEL

At the helm station you will find an accessory switch panel. These accessory switches are specified below.

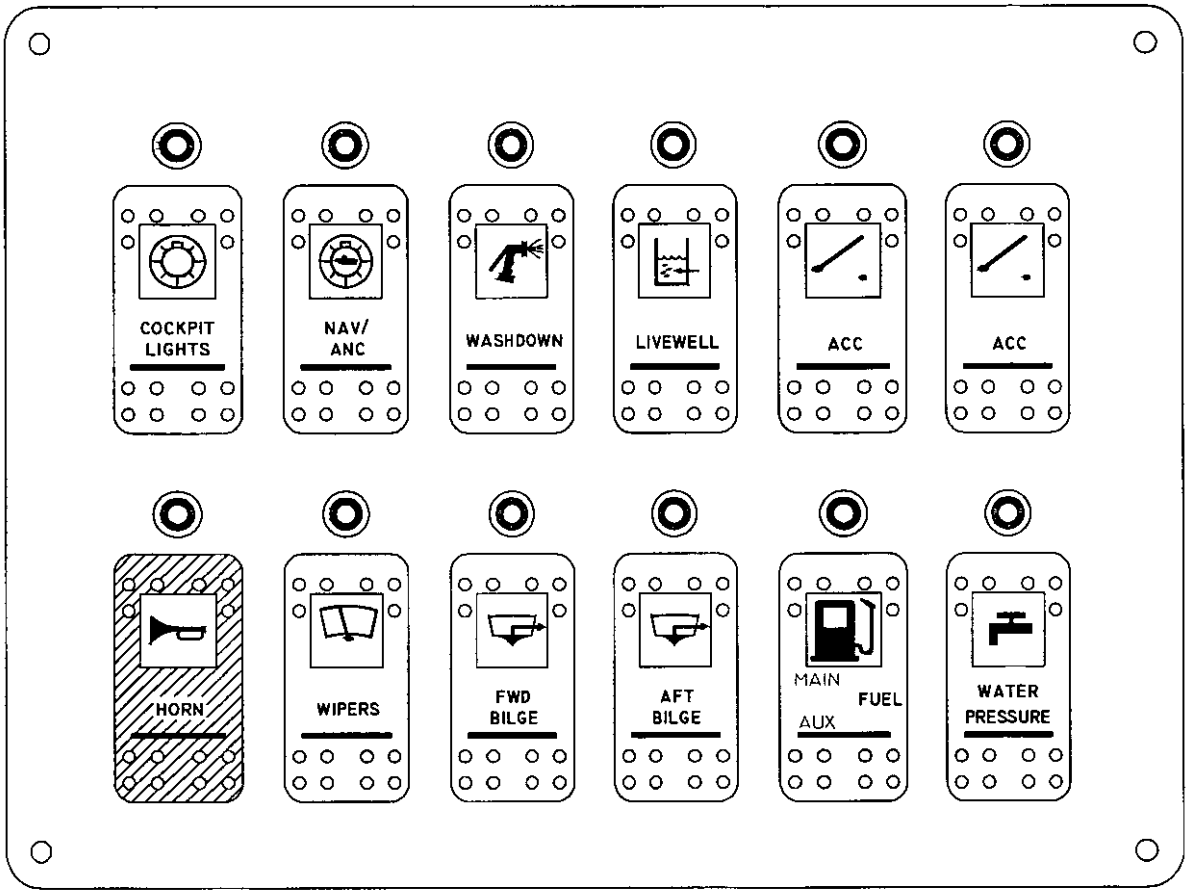

THIS REPRESENTS A GENERIC SWITCH PANEL LAYOUT. ACTUAL PANELS WILL DIFFER DEPENDING ON THE MODEL OF BOAT, AND THE OPTIONAL EQUIPMENT INCLUDED DURING MANUFACTURING.

- **BILGE PUMP**

  This two-way switch serves as an overriding manual switch in the event of failure of the automatic switch in the bilge.

- **COCKPIT LIGHTS**

  The cockpit lights provide illumination for the cockpit area.

- **FUEL**

  This two-position switch (MAIN-AUX) provides separate fuel quantity readings from each tank. This switch only operates the fuel level gauge and does not select the tank in use.

- **HORN**

  The horn meets the requirements of the United States Coast Guard's emergency sound signaling device.

- **LIVEWELL**

  This switch activates the livewell. Reference the Livewell operation section in Chapter Seven of this manual for information on this feature.

- **WASHDOWN**

  This switch pressurizes the washdown system. Reference the Washdown operation section in Chapter Seven for information on this feature.

- **NAVIGATIONAL/ANCHOR LIGHTS**

  Your boat is equipped with lights that meet international lighting regulations. The three position switch (NAV-OFF-ANCHOR) changes the lighting configuration to running or anchor lights. Note that this switch also operates the gauge lights.

- **WIPERS**

  This switch activates the windshield wipers.

- **ACCESSORY**

  Switches, fuses and breakers labeled "ACC" are unused. These components are provided for the addition of non-factory installed accessories.

Switch identification labels are available through your dealer for non-factory installed options.

CHAPTER 5
MAINTENANCE AND SERVICE

GENERAL

The amount of maintenance required to keep your boat operating properly and to maintain the appearance is dependent on how the boat is used, amount of usage, type of water, geographic location etc.

Your hull and deck are constructed by the hand lay-up method using the highest quality fiberglass mat and woven roving. This method of construction ensures a proper fiberglass-to-resin ratio and uniform thickness, which together result in a much stronger boat than ones constructed of "chopped glass". This process ensures that your Grady-White is the strongest most durable fiberglass boat possible.

The bilge areas should be kept clean and dry. Leaks found early and corrected will less likely cause damage. Do not allow grease and dirt to build up.

Proper maintenance of your boat is not only a source of pride, it is the key to maintaining your boat's value. A few simple steps will keep your fiberglass Grady-White looking showroom bright for years.

EXTERIOR FIBERGLASS FINISH

The exterior finish of your Grady-White is a thin layer of resin with a finished color pigment called gelcoat. It is used for cosmetic purposes and makes routine maintenance relatively simple. Although gelcoat has a hard smooth surface it does contain microscopic pores that will allow surface discoloration if not kept clean.

- **MAINTENANCE**

  Normal exterior finish maintenance of your Grady-White boat is similar to the care you would give your automobile. Do not use caustic, highly alkaline cleaners or those containing ammonia. These cleaning agents may darken gelcoat. The resulting stain is a chemical reaction and can be removed with a rubbing compound followed by waxing.

- **CLEANING**

  The best way to prevent discoloration and soil build-up is to hose the boat with fresh water after each outing or on a regular basis. This build-up is the result of use and environmental pollutants. Clean the boat regularly with a mild household detergent and plenty of fresh water. Use a sponge on smooth surfaces including the deck and a brush on the nonskid. Rinse away all grime and residue.

- **WAXING**

  Gelcoat can lose its gloss due to constant exposure to the natural environment and pollutants, it will require special attention to restore the original gloss and color. See a local dealer for advice on wax for your boating region. The wax film will seal the pores as well as enhance the looks of your boat. **DO NOT wax surfaces that may be walked on, they will become slippery.** While waxing your boat inspect the surface for any damage. Have the damage corrected as soon as possible.

Gelcoat will age or dull naturally. Discolorations are shallow in depth. Factors that will affect the rate of discoloration are: the sun, pollution, old wax accumulation and the salt content of water. Polishing compound (fine abrasive) or rubbing compound (coarse abrasive) is recommended for use on fiberglass finishes to remove scratches, stains or restore severely weathered surfaces. These products can be applied by hand or mechanical means. The process below will help restore fiberglass finishes:

- Clean the affected area with a good detergent.
- Remove stubborn stains or discoloration by gently wet sanding the affected areas with 600 grit "wet or dry" sandpaper. **ALWAYS SAND IN ONE DIRECTION.** Use plenty of water and sand curves in the same direction. Dry the area to make sure all the discoloration has been removed. Repeat this process if necessary.
- Buff using a polishing compound suitable for fiberglass, an electric buffer (1750-1800 RPM) and an 8-inch lamb's wool pad.

⚠ CAUTION

Keep buffer moving. Do not allow it to rest in one spot. Heat build up will quickly distort the surface.

- When buffing is complete wash away compound with clear water and dry the area.
- Once the area is clean it may be waxed. This will enhance the gloss while providing a seal to retard staining or soil accumulation.

⚠ CAUTION

Compounding too often or excessive compounding can wear away the gelcoat.

REPAIRING

Though gelcoat is a very durable material, it is susceptible to scratches, blistering and web-like cracks (crazing) over time. It is elastic enough, however, to withstand strong blows while flexing with the hull's movement. Gelcoat problems are cosmetic and will not effect the structural integrity of your boat.

Some gelcoat damage and imperfections, such as nicks and scratches can be repaired by obtaining a color match patch kit. This kit can be purchased through your Grady-White dealer. Acetone, the most suitable cleaning agent for gelcoat can also be acquired through your dealer. Instructions are included in the patch kit.

⚠ WARNING

M.E.K. (Methyl ethyl ketone peroxide), gelcoat and acetone are flammable and hazardous chemicals that must be handled properly. Follow instructions carefully. After the gelcoat is catalyzed it will soon heat up and put off fumes. When finished with catalyzed chemicals or if they start to build up heat, submerse completely in water until cool.

BOTTOM PAINT

If your boat is left in the water for more than a few days at a time, the hull bottom (below the waterline) should be painted with anti-fouling paint to protect it from marine growth and barnacles that hinder performance. Since anti-fouling paint slowly dissolves to prevent marine growth inspection and cleaning of the boat bottom at least once per season is advisable. Repaint when necessary. To help prevent blistering use an epoxy barrier coat to be applied in conjunction with the anti-fouling paint.

CANVAS

Grady-White's canvas is made using the highest quality vinyl and latest sewing techniques. The canvas will not be completely leak proof. The seam holes in your canvas may stretch and tend to leak. However, you can correct this problem by applying *Apseal® or Uniseal™ to the seams.

Please understand that Grady-White does not warrant the fit and design of the canvas to be entirely watertight.

MAINTENANCE

To maintain your boat's top and other canvas follow these guidelines:

Fabric should be cleaned regularly to prevent the buildup of soil and penetrate the fabric. Simply brush off any loose dirt and hose down canvas and clean with a mild solution and warm water. Do not use petroleum-based or ammonia cleaners on canvas or clear vinyl as they will yellow. For heavily soiled fabric remove top from frame. Soak the fabric in a solution of 1/2 cup of Clorox and 1/4 cup of Ivory or Lux soap per gallon of warm water. Let soak until mildew and stains can be brushed out with a common kitchen brush. Rinse thoroughly with cold water until all soap is removed. Allow fabric to air dry completely. **DO NOT STEAM PRESS OR DRY IN AN ELECTRIC OR GAS DRYER**. This will damage the canvas fabric. Water repellent was applied to your canvas during manufacturing. After extended cleaning some of the repellent may have diminished and re-treatment of the fabric is recommended. Do not use wax-based products. Use a water based repellent like Apseal® or Uniseal™. Scotchguard® is effective for short-term use only.

SNAPS

- Zippers and snaps will loosen with use. Use care when starting the zipper to prevent damage. Lubricate the snap buttons and zippers with petroleum jelly.
- Fasteners should be unsnapped as close to the button as possible.

VINYL

- Clean clear vinyl thoroughly with denatured alcohol and then apply a protective layer of clear wax. **Do not** use paste wax, as it will turn the vinyl yellow. This process should be repeated as necessary to maintain the protective wax coating.
- Store and secure canvas before trailering.
- Dry all canvas before storing to prevent mildew.
- Remove the top, front and side panels; **roll** them for storage. This procedure is necessary to prevent the front and side vinyl pieces from cracking. **NEVER FOLD THESE PIECES!**

STORAGE

Consider the following steps when putting your folding top canvas option in the stored position:

- Fold the top and zip it into the canvas cover provided.
- Pivot the covered top into the stowed position on the foredeck. The canvas cover is equipped with a strap on each side and an eyelet in each strap. Place the eyelets over the male fasteners located on the port and starboard foredeck.
- Twist the male fastener 90 degrees to engage.

⚠ CAUTION
Secure the folded top when in the stowed position to prevent damage or the loss of the canvas.

UPHOLSTERY

Your exterior vinyl upholstery may be cleaned with a mild solution of household detergent and fresh water. Commercial cleaners for vinyl also work well.

Since the seams of your exterior upholstery are not waterproof, your upholstery should be stored in the cabin or covered when not in use.

Most cabin cushions are removable and may be dry-cleaned. Some cabin cushions are of a Herculon-type fabric and may be cleaned with upholstery cleaner.

⚠ CAUTION
DO NOT MACHINE-WASH THE CABIN FABRICS.

DURATRIM/POLYETHYLENE/PLEXIGLAS

Duratrim and polyethylene are used for toe rails, trim, cutting boards, lids etc. Duratrim has an appearance similar to teak but requires almost no maintenance. Maintenance of your duratrim should include regular cleaning with soapy water. Apply a surface protector at least twice per year. Polyethylene can be cleaned with products such as 409 or any spray and wipe cleaner. Plexiglas, used to cover your instruments radio box and also as storage doors, can be maintained by use of a glass cleaner and a soft cloth.

HARDWARE MOUNTING

When drilling holes for mounting hardware in boat surfaces make sure each hole is sealed properly. Sealing will prevent water leakage that is extremely important in fiberglass areas that have been reinforced with plywood. A drilled hole sealed improperly allows water inside the fiberglass this allows the plywood reinforcement to become saturated.

CAULKING/GASKET

Deck fittings, bow rails, windows, hatches etc., have been caulked or gasketed with the highest quality material to ensure a waterproof joint with the boat. However, the working action of normal use will tend to flex the joint and eventually break down the seal. Periodically inspect the caulking or gaskets for leaks. Recaulk or replace the gaskets when necessary or have your dealer do the repairs.

STAINLESS STEEL RAILS & HARDWARE

Your hardware is made of laboratory grade 316 stainless steel, and needs regular cleaning to maintain its "less staining" properties. The key to maintaining stainless steel is to keep it clean with a mild solution of soap and fresh water. Remove salt or dirt from your stainless steel on a regular basis.

FUEL SYSTEM MAINTENANCE

To determine whether a fuel flow problem is in your fuel system or your engine, follow this simple method. Connect a six-gallon portable tank to the engine and operate the engine. If the problem persist the likely cause is with the engine itself. If the problem goes away, the source must be in the boats' fuel system. One component that should be inspected if a restriction occurs is the anti-siphon valve. If fuel does not flow properly through this part it must be cleaned and/or replaced. **DO NOT** remove the anti-siphon valve and replace it with a regular barb.

Do not use fuels containing alcohol. Alcohol, particularly methanol, will absorb water that makes fuel more corrosive to metals in tanks and carburetors; it also shortens the durability of elastomers such as hose and gaskets.

After fueling, inspect the fuel hoses, connections, and tanks for tightness, signs of leaks, and deterioration. Annually conduct a more detailed inspection of fuel system components, especially those hidden from routine inspection. Replace any fittings, deteriorated hoses, clamps or connections immediately.

FUEL TANK COMPARTMENT

The fuel compartments need to be rinsed periodically, especially when used in a salt-water environment. Dirt accumulation attracts salt that creates salt crystals. Salt crystals can corrode most metal surfaces if left untreated over a period of time. To help protect your fuel tank from rust and corrosion rinse the compartment with **FRESH** water. Remove the access plates from fuel tank lids and inspect this area for leaks or unsecured lines.

The access plates on your fuel compartment lid seals this area. Over time the opening and closing of these plates cause the o-rings to wear-out. Replace these o-rings as necessary to maintain the watertight integrity of the plates.

REQUIRED MAINTENANCE PROCEDURE FOR ANODIZED ALUMINUM COMPONENTS

Lean Bars, Rod Holders, T-Top and Hardtop Frames, Outriggers, Etc.

Due to the nature of anodized aluminum and the harsh exposure conditions of the marine environment, it is important to follow a required maintenance procedure. Failure to follow a preventative maintenance procedure will most likely result in aluminum pitting.

These parts must be washed periodically with a very mild soap and water solution. Grady White recommends washing with a mild soap (such as Ivory Liquid) after each use, and every two to three weeks if stored in an outside marine environment. Strong cleaners and soaps must not be used; never use abrasive cleaners or products that contain chlorine bleach. These products can remove the anodized coating.

Give special attention to the upper tubes of a hardtop or T-top frame. The area just below the top is shielded by the canvas or fiberglass top and does not receive the natural rinse that rainwater provides. Failure to thoroughly clean and maintain this area will allow contaminates that attack the anodized aluminum to remain on the frame.

For maximum protection coat parts with a non-abrasive metal protector. The best protectors will displace moisture, remove contaminates, and leave a wax film protecting the anodized aluminum. Follow the application guidelines for the product you choose. A sample of one metal protector has been provided with your boat.

Metal Protectors:

Boeshield T-9.	Aluma Guard	Premier Polish
PMS Products Inc.	Rupp Marine, Inc	Aquatech
76 Veterans Dr. Unit 110	4761 Anchor Ave.	6726 Netherlands Drive, Suite 200
Holland, MI 49423	Port Salerno, FL 34992	Wilmington, NC 28405
800-962-1732	561-286-5300	800-853-7760

SHOWER SUMP

A shower in the head compartment drains into a contained "sump" which is used to prevent hair, soap, scum and bacteria from accumulating in the bilge and creating odors. This sump should be cleaned regularly. The sump pump box contains a filter. Remove the filter and rinse with water to clean. The filter should always be installed when using the shower to prevent the sump pump from becoming clogged.

SCUPPERS

Grady-White boats have self-bailing cockpits. This means water on the cockpit floor drains by gravity through large aft scuppers and **NOT** into the bilge. The aft drains or scuppers have an external flap assembly which restricts the flow of water back into the boat. Inspect the flaps periodically to make sure that they are free of debris. The scupper flaps may need periodic replacement if the rubber becomes damaged or no longer seals properly in the thru-hull.

BATTERIES

Batteries should be secured in a non-metallic tray to avoid electrolyte spills. An insulated boot should cover battery terminals. Fluid levels should be checked at least once a month depending on usage. Fill the battery to the upper level with distilled water. **Never** overfill the battery.

Keep terminals clean by scrubbing them with a stiff brush and a mixture of baking soda and water. Afterwards, apply a light coat of grease. The mixture should not enter the battery.

When not in use check the battery monthly by using a battery hydrometer that measures the specific gravity.

⚠ CAUTION

Never disconnect the battery when the engine is running. This can cause damage to the charging system. When replacing your battery reference your engine Owner's Manual for recommended battery type and required performance specifications.

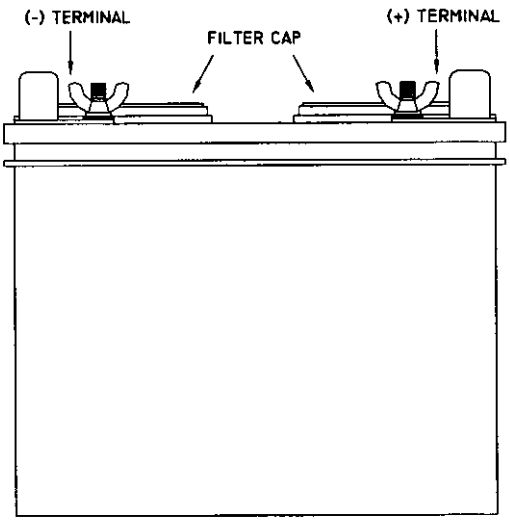

Batteries contain sulfuric acid, a harmful and potentially volatile chemical. When handling batteries, exercise caution and follow these guidelines.

- Avoid contact with skin, eyes or clothing.
- Protective gloves, eye wear, and clothing should be worn to minimize risk to yourself.
- Batteries produce explosive gases. Keep sparks, flame and cigarettes away. Ventilate when charging or using in an enclosed space.
- **KEEP OUT OF REACH OF CHILDREN**

This is not a complete set of guidelines; it is your responsibility to safely maintain your batteries and avoid injury. Use good judgement and remain alert to prevent an accident.

In the event of an accident or exposure, immediately reference these guidelines, then seek prompt medical advice or attention.

Antidote:

- EXTERNAL - Flush with water
- INTERNAL - Drink large quantities of water or milk. Follow with milk of magnesia, a beaten egg or vegetable oil. Contact physician immediately.
- EYES: Flush with water and get prompt medical attention.

⚠ CAUTION

When disconnecting and reconnecting battery cables, the black cable must be connected to the negative terminal and the red cable must be connected to the positive terminal. Reversing this procedure will immediately damage your system.

LIGHT BULB REPLACEMENT GUIDE

The following chart provides identification of replacement light bulbs for your Grady-White. All of the lights shown may not be used on every model boat. If you have difficulty finding replacement bulbs under the part numbers listed contact your Grady-White dealer for further assistance. Always use the specified replacement bulb. Improper substitution my result in electrical malfunction, insufficient lighting, boat damage or personal injury.

The following are Registered Trademarks: Perko, Attwood, Gem, Ramco, Guest, GE, Sylvania, and Phillips.

18" REDUCED GLARE HARDTOP MAST LIGHT
LIGHT MANF.: PERKO
REPLACEMENT BULB #: PERKO 338 DP2 CLR

INTERIOR CABIN LIGHT
LIGHT MANF.: RAMCO
REPLACEMENT BULB #: RAMCO 286 OR
GE OR SYLVANIA OR PHILLIPS G4

COCKPIT LIGHT
LIGHT MANF.: ATTWOOD
REPLACEMENT BULB #: ATTWOOD #90

STERN POLE LIGHT
LIGHT MANF.: PERKO
REPLACEMENT BULB #: PERKO 337 012 DP

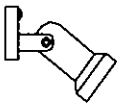

READING LIGHT FOR CABIN
LIGHT MANF.: GEM
REPLACEMENT BULB #: GEM 1831 21CP OR
GE/SYLVANIA #1142

REDUCED GLARE WINDSHIELD MASTLIGHT
LIGHT MANF.: PERKO
REPLACEMENT BULB #: PERKO 338 DP2 CLR

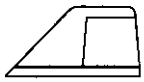

COMBINATION BOWLIGHT
LIGHT MANF.: ATTWOOD
REPLACEMENT BULB #: GE 2641L (12V / 10W)

DOME LIGHT
LIGHT MANF.: PERKO
REPLACEMENT BULB #: PERKO 337-013 DP

SEPARATE SIDE BOWLIGHTS
LIGHT MANF.: ATTWOOD
REPLACEMENT BULB #: GE 2641L (12V / 10W)

NIGHT VISION DOME LIGHT
LIGHT MANF.: GUEST
REPLACEMENT BULB #: GUEST P-13650 OR GE 912

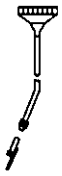

REDUCED GLARE CONSOLE GRABRAIL MASTLIGHT
LIGHT MANF.: PERKO
REPLACEMENT BULB #: PERKO 338 DP2 CLR

ACCESSORY WIRING COLOR AND FUSE CHART

ACCESSORY	WIRE SIZE / COLOR	AMP	LOCATION
LIGHTS			
BOW LIGHT	16 GA. GRAY	15.0	ACCESSORY PANEL
AFT POLE LIGHT	16 GA GRAY/WHITE		ACCESSORY PANEL
MAST LIGHT	16 GA GRAY/RED		ACCESSORY PANEL
PANEL LIGHTS	16 GA DARK BLUE		ACCESSORY PANEL
CABIN LIGHTS	16 GA DARK BLUE/GREEN	10.0	FUSE BLOCK
LIVEWELL LIGHT	16 GA. BLU/RED	w/ LIVEWELL PUMP	
COCKPIT LIGHTS	16 GA DARK BLUE	10.0	ACCESSORY PANEL
SPREADER LIGHTS	14 GA DARK BLUE/WHITE	10.0	HARDTOP / T-TOP FUSE BLOCK
PUMPS			
BILGE PUMP (FORWARD):			
ATTWOOD 1250	16 GA BROWN/BLACK	4.0	ACCESSORY PANEL
AUTO FLOAT SWITCH (FORWARD)	16 GA BROWN/RED	5.0	NEAR BATTERY / BATTERY BOX
BILGE PUMP (AFT):			
ATTWOOD 1700	16 GA BROWN	10.0	ACCESSORY PANEL
AUTO FLOAT SWITCH (AFT)	16 GA BROWN/WHITE	7.5	NEAR BATTERY / BATTERY BOX
SHOWER SUMP PUMP (FLOAT SWITCH)	16 GA BROWN/ORANGE	4.0	FUSE BLOCK
WATER PRESSURE PUMP (CABIN SHOWER)	12 GA ORANGE/BLUE	15.0	ACCESSORY PANEL
WATER PRESSURE PUMP	16 GA ORANGE/BLUE	5.0	ACCESSORY PANEL
WASHDOWN PUMP	12 GA ORANGE/BROWN	15.0	ACCESSORY PANEL
LIVEWELL PUMP			
RULE 700 GPH	16 GA ORANGE/BROWN	5.0	ACCESSORY PANEL
RULE 1100 GPH	16 GA ORANGE/BROWN	8.0	ACCESSORY PANEL
IN-LINE MACERATOR PUMP	12 GA ORANGE/GRAY	20.0	ACCESSORY PANEL
HEAD PUMP (ELECTRIC)	10 GA RED	25.0	AC/DC PANEL
MACERATOR PUMP (MARINE HEAD)	10 GA RED	25.0	ACCESSORY PANEL
MISCELLANEOUS			
HORN	12 GA ORANGE/WHITE	15.0	ACCESSORY PANEL
WINDSHIELD WIPER (ACTUATOR):			
PORT	16 GA ORANGE/GREEN	5.0	ACCESSORY PANEL
STARBOARD	16 GA ORANGE/BLACK		ACCESSORY PANEL
WINDSHIELD WIPER (POSITION)	16 GA ORANGE		
ACCESSORY SWITCH	16 GA ORANGE	10.0	ACCESSORY PANEL
ACCESSORY GROUNDS (BRANCH)	16 GA BLACK	N/A	
ACCESSORY GROUNDS (MAINS)	6 OR 10 GA BLACK	N/A	
HYDRAULIC TRIM TABS	16 GA HARNESS (SUPPLIED)	20.0	FUSE BLOCK
MAIN FUEL TANK (SENDER)	16 GA PINK	N/A	ACCESSORY PANEL
AUXILIARY FUEL TANK (SENDER)	16 GA PINK/WHITE	N/A	ACCESSORY PANEL
ACCESSORY PANEL POWER LEAD	6 OR 10 GA RED	40.0	CIRCUIT BREAKER NEAR BATTERY
VHF (HARDTOP RADIO BOX) POWER LEAD	10 GA RED/WHITE	10.0	NEAR BATTERY / BATTERY BOX
VHF GROUND	10 GA BLACK/WHITE	N/A	
12 VOLT ACCESSORY OUTLET	10 GA RED/ORG	15.0	FUSE BLOCK
MEMORY WIRE	16 GA RED/PINK	10.0	NEAR BATTERY / BATTERY BOX
OIL SENDER (STBD)	16 GA LT. BLUE	N/A	
OIL SENDER (PORT)	16 GA LT. BLUE/WHITE	N/A	
BILGE BLOWER (300 ONLY)	16 GA. BRN/YEL	5.0	ACCESSORY PANEL
FUEL GROUNDS	16 GA GREEN	N/A	

TYPICAL OUTBOARD SWITCH PANEL WIRING

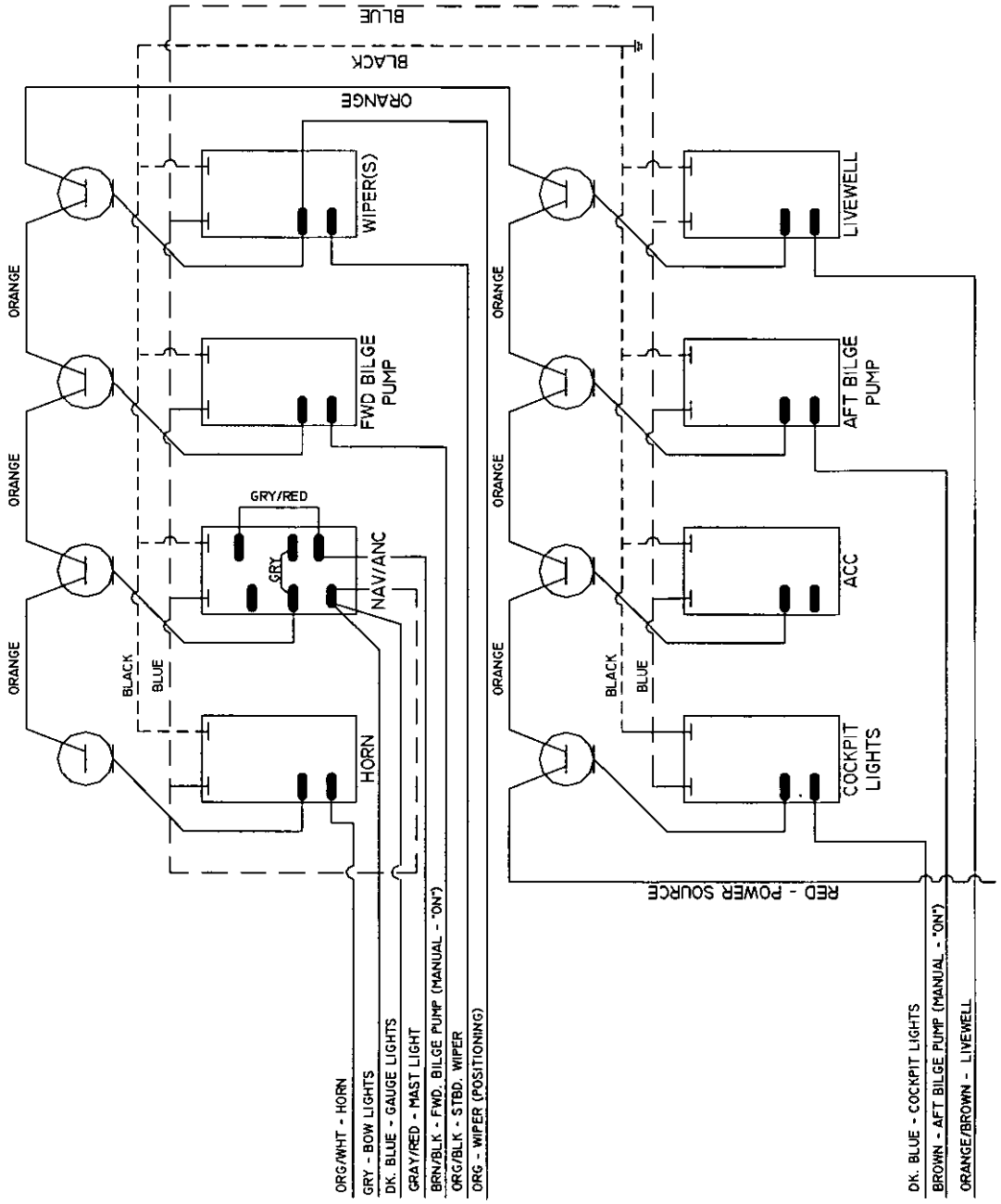

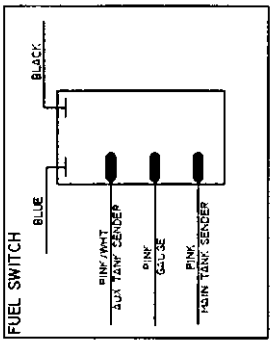

NOTE:
1. WIRES TERMINATE IN TWO PLUGS THAT GO TO INDIVIDUAL COMPONENTS THROUGH HARNESSES
2. NOT ALL COMPONENT SYSTEMS ARE INSTALLED ON ALL MODELS. DRAWING APPLIES TO ONLY THOSE ITEMS THAT ARE INSTALLED AND CONNECTED. EXTRA WIRES ARE FOR DEALER TO INSTALL OTHER SWITCHES AND ACCESSORIES
3. INDICATOR LIGHTS ARE INCORPORATED INTO THE SWITCHES WHERE NEEDED
4. BOATS WITH TWO FUEL TANKS HAVE A TWO POSITION SWITCH FOR SELECTING MAIN OR AUX TANK. WIRING FOR THE SWITCH IS SHOWN IN FIGURE 1

CHAPTER 6
WINTERIZATION AND STORAGE

GENERAL

Boats stored during the winter or for an extended period of time require some routine maintenance. Prior to and during the storage process the boat and its systems should be checked for maintenance and repairs. Arrange repairs during the storage period.

Avoid costly damage and delay when launching your boat by having it stored and winterized properly. This information is presented as a general guide and the actual storage should be performed by a professional and qualified dealership.

BOAT STORAGE

To avoid personal injury and property damage it is advised to take extra precautions when lifting or moving the boat for storage. Grady-White Boats are equipped with stern lifting eyes and a bow towing eye. These eyes are provided for moving and temporary lifting. For permanent lifting, you will need to have or add a bow lifting ring option. Eyes should be inspected regularly to insure structural integrity.

⚠ WARNING

THE BOAT SHOULD NOT BE STORED BY USING THE PAD EYES, UNLESS THE BOAT IS EQUIPPED WITH A BOW LIFTING RING. PAD EYES SHOULD BE INSPECTED PERIODICALLY IF USED FOR LIFTING.

While transporting a boat by lift or tow motor the structure should remain as close to ground level as possible. If slings are necessary for lifting or transporting they should be in proper condition and tied together to prevent any movement (separating or slipping) which could cause damage to the boat. If tow motors are used to move the boat the forks should be padded and in a secure location under the hull near the chine. The forks should be long enough to prevent the boat from rocking forward and aft causing it to become unbalanced.

⚠ WARNING

THE 300 MARLIN SHOULD NOT BE LIFTED BY THE PAD EYES. TO LIFT THIS MODEL USE SLINGS.

Other conditions that should be considered before hauling, transporting or storing your boat include overhead lines ground conditions (frozen or soft) and storm conditions that may arise.

When storing your boat on the trailer raise and block the trailer axle to prevent tire deterioration. This is an excellent time to lubricate and pack the wheel bearings per the manufacturer's instructions.

Make sure the keel, chine and transom are fully supported. Indoor storage is beneficial particularly if your climate produces freezing weather. The storage unit should not be airtight but should be ventilated. Ventilation is extremely important both around and through the boat.

For outdoor storage a canvas cover should be used to prevent "sweating". One method is to build a frame over the boat to support the canvas. It should be a few inches wider than the boat so the canvas will clear the rails and allow passage of air. The cover should be fastened securely so that winds cannot remove it or cause it to chafe the boat. A poor covering job will eventually cost more than the price of a well-made cover.

⚠ WARNING

IF THE BOAT IS SHRINK WRAPPED WITH PLASTIC DURING STORAGE, THE FUEL FILL AND VENT FITTING MUST BE OUTSIDE OF THE ENCLOSURE TO PREVENT THE TRAPPING OF DANGEROUS FUMES OR SPILLAGE FROM THERMAL EXPANSION.

CLEANING AND LUBRICATING THE BOAT

Clean and wax the boat before storage. If your boat stays in the water there may be a layer of growth on the bottom. As it dries, this debris will harden. Clean, scrub, and scrape the bottom promptly when the boat is removed from the water. Thoroughly remove all marine growth and other foreign matter from the hull. Clean the inside of hull openings, thru hull fittings and scupper drains. Inspect the hull bottom for damage.

Check cleats and rails for corrosion and tightness. Clean all stainless steel as directed under MAINTENANCE. Use a good quality metal preservative like T-9® on all metal surfaces to prevent salt water damage. Check all hinges for corrosion. Lubricate hinges as necessary. Check for loose silicone, hinges, and unseated gaskets. Replace or tighten where necessary. Heavy seas pounding and twisting the hull can cause leaks in your windows, doors and hatches.

DRAINING AND WATER SYSTEMS

Remove the garboard drain plug and open all valves and seacocks to keep the bilge dry. Store your boat with the bow elevated for drainage.

Drain all water tanks, lines and pumps to prevent freeze damage. The fresh water system may be drained by running any faucet until the tank is empty. When empty, turn the faucet off to prevent pump damage. Residual water will not damage the tank. If desired, the fresh water system may have a non-toxic antifreeze added. This antifreeze can be purchased at marine or camping dealerships.

To drain other lines, close seacocks and run the pumps until the lines are dry. After lines are dry open the seacocks. In warmer climates draining will help prevent water stagnation.

HEAD SYSTEM

Empty upper tank and holding tank and make sure all water is cleared. Reference Owner's Packet for manufacturer's information on winterization. Water should be removed from deck pump-out lines.

FUEL SYSTEM

The compartments that house the fuel tank(s) should be rinsed with fresh water to keep salt crystals from forming and corroding the fuel tanks. After rinsing, make sure all water is drained from the compartments.

Do not use fuel that contains alcohol by reason of it absorbing humidity. The resulting condensation will separate from the fuel as winter temperatures drop. An accumulation of this condensation can lead to corrosion. There are fuel additives available to inhibit condensation. Keep tanks full but do not overfill.

This is also a good time to have your fuel filters/water separators replaced.

BATTERIES

Check the electrolyte level in your batteries and fully charge the batteries before storing. A weak battery loses its charge more rapidly than a strong battery. Ideally, you should disconnect the batteries and cover the terminals with grease to prevent corrosion.

When replacing batteries in the boat remove excess grease from terminals and charge as necessary before reinstalling.

ENGINES

Check your engine Owner's Manual regarding the procedures for winterizing the engines. Follow these important instructions carefully, and your engines should survive most weather conditions. Change all filters. Check hoses and clamps. If you have any vibrations during the season look for loose engine bolts, bent shafts or bent propellers.

STORAGE CHECKLIST

In addition to the winterization guidelines, the following checklist can be used as a guide for storing your boat. Additional details should be added as needed for your personal application.

- Remove all loose items and personal effects.
- Remove any detachable and valuable equipment such as electronics. Store electronics inside. A built-in compass should be covered. Ultraviolet rays from the sun will "cloud" the compass and make it difficult to read.
- All equipment should be winterized as directed in the manufacturer's manuals.
- Store cushions indoors to prevent mildew.
- Clean the exterior and interior of the boat. Remove all grease, oil, salt spray etc.
- Remove all garbage. Clean the refrigerator, cabinets, lockers/storage, fishboxes and livewells. The lids and doors should be propped open for ventilation.
- Empty toilet and holding tank. Flush with fresh water.
- Lubricate all hinges, valves, the backs of electrical panels and other surfaces that may rust.
- Check underwater items. Hardware should be in good condition and tight.
- Inspect electrical systems and have any repairs performed.

GETTING BOAT OUT AFTER STORAGE

Before placing boat in the water for the boating season, have hull bottom sanded and reapply anti-fouling bottom paint, if necessary. Leave as much equipment and personal effects off the boat until after launch and final check.

PRIOR TO LAUNCHING

Start your own personalized list of items to check and perform prior to placing your boat in the water. The following list will give you some ideas and suggestions.

- Check all gear and replace if necessary.
- Check thru hull fittings for cleanliness, damage and tightness.
- Check prop installation and tightness.
- Clean battery terminal posts with a wire brush or bronze wool. Install batteries, attach cables and tighten. Apply grease to post to exclude air and acid.
- Check all wire connections for contact corrosion and tightness.
- Check hull valves for easy operation and for condition of hose.
- Check operation of bilge pumps in manual and automatic modes.
- Check shower sump pump.
- Check operation of all DC circuits if applicable.
- Check the hose and lines on the fresh water system, install drain plug and close drain valves.

AFTER LAUNCHING

- With the boat in the water check all sources of possible leaks stem to stern.
- Fill fuel system and thoroughly check out fuel system including lines, fittings, connections, valves and filters for leaks.
- Perform maintenance on engines according to the manufacturer's manuals prior to returning them to service.
- Check all engine and steering control cables and linkage for operation. Lubricate cables and linkage as necessary.
- Fill fresh water system and check for leaks.
- Connect to shore power. Check out all electrical equipment, lights, hot water heater, air conditioning system etc., these are optional on some models and may not apply to your boat.
- Check operation of toilet (reference manufacturer's manual).
- Check safety equipment including flares, fire extinguisher and first aid kits. Replace items as necessary.
- Test run engines and generator (if installed) as directed in manufacturer's manual.

CHAPTER 7
TABLE OF CONTENTS

SPECIFICATIONS / OPTIONAL FEATURES 7-2

OPERATION OF STANDARD FEATURES

Accessory Outlet - 12 volt 7-3
Bilge Pump with Float Switch 7-3
Bilge Pump Location 7-3
Main Circuit Breaker 7-3
Rigging Compartment 7-3
Seacocks 7-3
Livewell – Raw Water 7-4
Washdown Operation 7-4
Cockpit Shower 7-4
Windshield Washer Switch 7-4
Head Shower 7-4
Head Operating Instructions
Marine Heads 7-5
Trim Tabs and Switch 7-6
Trim Tab Pump Location 7-6
Dockside Power 7-7
Connecting The Dockside Power 7-7
Disconnecting the Dockside Power 7-7
AC Panel 7-8
AC Powered Auxiliary Switches 7-8
Battery Charger 7-8
Microwave 7-8
Water Heater 7-9
Battery Select Switch 7-9
Compass 7-9

OPERATION OF OPTIONAL FEATURES

Air Conditioner 7-10
Outriggers
Advantages 7-10
Instructions 7-10
Care and Maintenance 7-10

DIAGRAMS

AC Inlet And Receptacle Wiring
Schematic And Warning Label 7-11
AC Panel Wiring 7-12
Access Plate and Rigging Tube Location 7-13
Accessory Wiring 7-14
Battery Select Wiring 7-15
Dockside Power Wiring 7-16
Hardtop Wiring 7-17
Head Layout - Marine 7-18
Labels and Location 7-19
Livewell System Layout 7-20
Livewell/Washdown System 7-21
Pressurized Shower/Hot Water System 7-22
Thru Hull Detail 7-23

SPECIFICATIONS

BEAM-AMIDSHIP	9' 6"
BRIDGE CLEARANCE	7' 7"
BRIDGE CLEARANCE W/HARDTOP	9' 9"
CENTERLINE LENGTH	28'
FRESH WATER CAPACITY	32 GALLONS
FUEL CAPACITY - AUX	70 GALLONS
FUEL CAPACITY - MAIN	150 GALLONS
HULL DRAFT	18"
ENGINE SHAFT LENGTH	25"
TRANSOM WIDTH	9'
DRY WEIGHT	5800 LBS
KEEL TO TOP OF WINDSHIELD BAR	107 5/8"
STEERING TYPE	HYDRAULIC
CONTROL CABLE LENGTH	PORT - 22'
	STBD – 24'
OUTBOARD MAX. HP	500 HP

OPTIONAL FEATURES

ACCESSORIES

- Air Conditioning
- Anchor Windlass
- Boat Lifting Ring
- Hardtop Rod Holders
- Head - Marine Head W/Electric Flush
- Outrigger Kit 18 Ft. (Lee Jr. Cabin Side Mount)
- Rod Storage - Folding Cabin Rack (6)
- Seating - Companion Bench Seat
- Stereo/CD System

CANVAS OPTIONS

- Helm Station Cover

OPERATION OF STANDARD FEATURES

ACCESSORY OUTLET - 12 VOLT

A 12-volt outlet is installed at the helm. This outlet provides an easily accessible power supply for accessories such as cellular phones and spotlights.

NOTICE
This outlet cannot be used with a cigarette lighter.

BILGE PUMP with FLOAT SWITCH

Your boat is equipped with automatic float switches adjacent to the bilge pumps. A float switch will enable the bilge pump to come on automatically if a significant amount of water accumulates in the bilge. These switches are wired directly to the batteries. They function independently of the battery select switches and can activate the bilge pump with the battery select switches in the "off" position. Batteries should be inspected frequently to ensure proper operation. The bilge pumps are also equipped with switches at the helm. When a switch is in the "on" position the pump will run continuously. When a switch is in the "off" position the pump is off unless activated by the float switch.

⚠ CAUTION
Do not run the pump dry for a prolonged period of time.

BILGE PUMP LOCATION

The 282 has two bilge pumps. One is located in the aft bilge under the aft bench seat and the other pump is located in the cabin under the sole floor. This pump can be reached through the access plate in the cabin floor.

MAIN CIRCUIT BREAKER

There is a 40 AMP circuit breaker located in the panel below the battery select switches. This breaker is the main protection for the wiring supplying power to the accessory switch panel and helm fuse block. If this breaker is tripped depressing the red button on the breaker box will reset it.

RIGGING COMPARTMENT

The rigging compartment is located aft of the fuel tank compartment, under the bench seat. This area is functional for rigging ignition protected accessories and contains two flats for mounting transducers.

SEACOCKS

Ball valve seacocks are installed on the thru hulls for the livewell and washdown features. These seacocks are located under the aft bench seat. It is necessary for the seacocks to be in the open position for operation.

NOTICE
All seacocks should be in the closed position if not in use or if the boat is unattended to prevent the taking on of water if a plumbing component fails.

LIVEWELL - RAW WATER

To operate the livewell, first open the seacock located in the port side of the aft bilge. Place the livewell standpipe in the drain located at the bottom of the livewell; screw it down until the black flange makes contact with the flange on the drain fitting. The livewell switch at the helm should be in the "ON" position. Water will enter through an inlet near the top of the livewell and be distributed through a series of holes arranged vertically along the side of the livewell. The water will rise to a depth even with the strainer on the standpipe and drain overboard.

NOTICE
If the livewell seacock is left open and the pump is not "on" the boats forward motion through the water will gradually fill the box. Closing the seacock may prevent this inadvertent filling when the livewell option is not in use.

NOTICE
Under certain conditions placing the outboard engine(s) in reverse will ventilate the water under the boat and create an airlock in the livewell pump. To prevent this situation from occurring, it is recommended that the livewell be turned "OFF" prior to any high RPM or continuous reverse operation. In the event the livewell pump becomes air-locked, this situation may sometimes be corrected by turning the pump "OFF" for 15-20 seconds.

WASHDOWN OPERATION

To operate the washdown open the seacock located on the starboard side of the aft bilge. Depress the washdown switch on the accessory switch panel at the helm station. The washdown system will now be pressurized at the washdown faucet outlet. This outlet mat be used alone or with a washdown hose. A washdown hose with a spray nozzle attached may be used intermittently without turning the switch "off", basically the same as a home yard hose with a nozzle. The washdown pump has an internal pressurization switch that will maintain water pressure as needed until the switch is turned "off" at the switch panel.

COCKPIT SHOWER

To operate the cockpit shower the water pressure switch located on the accessory switch panel must be in the "on" position. Open the flap and pull the shower wand from the recessed deck fitting. Depress the button on the back of the wand to spray water. To reinstall the shower wand into the recessed fitting, gently feed the hose down through the deck and replace the flap on the fitting.

WINDSHIELD WASHER SWITCH

A valve located in the starboard deckwing controls your windshield washer. Water may be sprayed on the windshield by opening this valve with the Fresh Water System pressurized (the water pressure switch on the accessory switch panel must be in the "on" position). This water is supplied from the fresh water tank.

HEAD SHOWER

The water pressure switch located on the accessory switch panel activates the head shower. After turning this switch "on" the shower water flow can be controlled by the head shower fixture.

HEAD OPERATING INSTRUCTIONS

HAND PUMP MARINE HEAD OPERATION

1. Open the marine head inlet seacock (handle in the vertical position). This seacock is located under the access plate in the cabin sole floor on the starboard side of the keel.
2. Position the wet/dry bowl selector in the wet bowl setting. Fill the toilet with water by pumping the handle several times.
3. **Flush** the toilet by pumping the handle several more times in the wet bowl position.
4. Move the bowl selector to the dry bowl position and pump the handle until almost all of the water is removed. Leave the toilet in the dry bowl position when not in use.

ELECTRIC MARINE HEAD OPERATION

1. Open the marine head inlet seacock (handle in the vertical position). This seacock is located under the access plate in the cabin sole floor on the starboard side of the keel.
2. **Flush** the toilet by turning the flush control knob clockwise on the pump beside the bowl. Turn the flush control knob counter clockwise to remove most of the water from the bowl.

EMPTYING MARINE HEAD HOLDING TANK BY USE OF OVERBOARD DISCHARGE

1. Open the marine head discharge seacock (handle in the vertical position). This seacock is located under the access plate in the cabin sole floor on the port side of the keel.
2. Press the show level button on the tank level monitor.
3. Press the pump out button until the light on the monitor indicates the tank is empty.
4. Close the discharge seacock (handle in the horizontal position).

⚠ CAUTION

Overboard discharge seacock must be sealed and secured in the closed position in accordance with the laws in your boating area.

EMPTYING MARINE HEAD HOLDING TANK THROUGH DECK PUMP-OUT

1. Remove the cap from the deck pump-out fitting located in the starboard walkaround.
2. Connect a vacuum hose from a pump-out station to the deck fitting and run until the tank is empty. Replace the cap on the deck pump-out fitting.

TRIM TABS AND TRIM TAB SWITCH

Trim tabs are electrically and hydraulically operated and are used to modify the attitude of the boat while moving. These trim tabs may also be used to adjust the boat's running angle in adverse seas or to compensate for unusual load conditions.

TRIM TAB

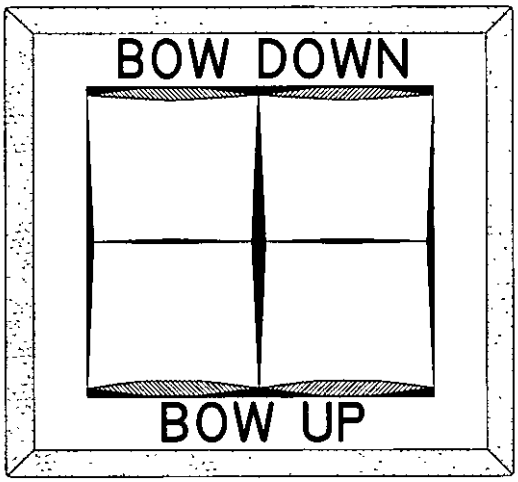

TRIM TAB SWITCH

The trim tabs are operated by a two-rocker switch panel and will aid in trimming the boat fore and aft for a smoother ride. The switches are marked "bow down" and "bow up". Trim tabs in the extreme "bow up" positions will have no effect on the boat's ride.

Trim tabs in the extreme "bow down" position will cause the boat to come on plane with minimum bow rise. Unless you are operating at low speeds or with considerable cockpit weight you will likely want to raise the tabs slightly when underway to avoid "plowing" water. With the tabs in the "bow down" position you will be able to maintain a plane at the least possible RPMs.

Trim tabs can improve the ride of your boat by adjusting where the water is hitting the keel line. In a slight chop, the waves may be hitting the keel of your boat around the helm area, causing an jarring ride. By adjusting the trim tabs and lowering the bow, the waves will hit the keel at a more forward point, softening the ride. Experiment with trim tabs in various sea conditions to determine the best positions for your boat under special load conditions.

Trim tabs are also useful in correcting a port or starboard running list. If the boat is listing to the port side press the starboard trim tab switch toward "bow down". Press the port trim tab switch toward "bow down" to correct a starboard list. This will tend to lower the bow by pulling the higher side to a level position. If your bow is already in a low position you may correct list by pressing the trim tab switch toward "bow up". This will cause the low side to rise and level the boat. It will also gradually improve the running angle.

TRIM TAB PUMP LOCATION

The Sailfish trim tab pump is located behind the aft berth wall. The pump is reached by removing both the center poly cover board on the aft berth wall and the poly wall in the aft berth storage compartment.

DOCKSIDE POWER

The dockside power option allows the use of AC equipment on board the boat. This equipment includes any permanently installed appliances such as a microwave, water heater, or it may be a household item plugged into a receptacle. The dockside power is utilized by connecting the heavy-duty cable supplied with the boat to an appropriate external power source. This cable provides power to the boat's AC inlet that is wired to the AC panel. The AC panel allows distribution to the various appliances and outlets. See the dockside wiring diagram at the end of this chapter.

⚠ CAUTION

Always disconnect the dockside power cable if leaving the boat unattended for an extended period of time.

CONNECTING THE DOCKSIDE POWER

1. Verify that the external power source is a 3 wire grounded system with amperage and voltage ratings compatible with the boat's AC system ratings.
2. Be sure there is sufficient cable length to allow for normal movement between the boat and the dock.
3. Turn all AC panel switches (including the main) to the "OFF" position. Turn the circuit breaker at the dock outlet to "OFF".
4. Connect the dockside power cable at the boat inlet first.
5. Connect the dockside power cable at the dock outlet and turn the dock outlet circuit breaker to "ON".
6. Turn the main circuit breaker to the "ON" position.

NOTICE

If there is no power at the AC panel after completing the above steps, check the in-line circuit breaker under the aft starboard gunwale. The breaker protects the wiring between the cable inlet and the AC panel and must be in the "ON" position for the panel to receive power.

⚠ WARNING

If the reverse polarity indicator on the AC panel is activated immediately disconnect the dockside power cable and have a qualified electrician correct the fault.

DISCONNECTING THE DOCKSIDE POWER.

1. Switch all circuit breakers at the boat's AC panel "OFF".
2. Switch the circuit breaker "OFF" at the dock outlet.
3. Disconnect the dockside power cable at the dock outlet first.
4. Disconnect the dockside power cable at the boat inlet.

NOTICE

Keep inlet cover closed tightly when not in use.

AC PANEL

If your Sailfish is equipped with dockside power you will have an AC panel. Some AC powered switches are included with optional equipment and may not be found on your boat.

AC POWERED AUXILIARY SWITCHES

Dockside power must be connected to shore and the circuit breaker located under the starboard deckwing must be in the "on" position for these switches to operate. The AC panel wiring diagram and a receptacle wiring schematic are provided at the end of this chapter.

- MAIN POWER SWITCH

  The main power switch must in the "on" position to operate the various accessory switches.

- BATTERY CHARGER SWITCH

  The battery charger has a ammeter for indicating the output to the batteries during operation.

- WATER HEATER SWITCH

  This switch activates your six-gallon water heater.

⚠ WARNING

TO AVOID HEATING ELEMENT FAILURE DO NOT TURN ON THE HOT WATER HEATER *UNLESS* IT IS FILLED WITH WATER.

- MICROWAVE

  An outlet has been designated for microwave use only. Read all instructions in the manufacturer's Operating Manual before operation.

- OUTLETS SWITCH

  This switch provides power to the three electrical outlets. The head outlet located on the aft wall of the head compartment is a duplex ground fault receptacle and is equipped with a cover plate. The cabin and helm station outlets are also duplex receptacles. The cabin and helm receptacles are wired in series with the head outlet and also have ground fault protection.

BATTERY CHARGER

This optional component is located in the aft rigging compartment near the batteries. For this charger to work the dockside power must be operating. Turning the breaker switch at the AC panel to the "on" position activates the charger. The charger has a built in isolator that senses the charging needs of all the batteries and distributes charge accordingly. At the point that all of the batteries are nearly fully charged, the charger will automatically reduce the current being sent to the batteries to a maintenance level. For more information refer to the Operation Manual for the battery charger.

MICROWAVE

The dockside power must be connected for the microwave to function. Refer to the Operation and Maintenance manual for specific instructions on the safe and proper use of the microwave.

WATER HEATER

The water heater will provide hot water to the pressurized fresh water system if the dockside power is connected and the AC breaker switch is "on". Follow the Operation and Maintenance manual for the proper use and care of the water heater.

BATTERY SELECT SWITCH

The 282 Sailfish is equipped with three batteries and two select switches. Two of the batteries are wired in parallel and function as a single battery bank (#1 position on the switches). The third battery is a separate bank (#2 position on the switches).

An outboard engine should be connected to each battery select switch. Either engine may be started with either battery bank by selecting position #1 or position #2 on the select switches. In normal use, select position #1 on the starboard switch and position #2 on the port switch so that both battery banks will be charged simultaneously when the engines are running. The DC accessories on the boat will always be controlled by the starboard switch. This recommended setting also insures that the accessories are being powered by the larger battery bank.

⚠ WARNING

***Never* turn the battery select switch to the "OFF" position with the engine running as this could damage the charging system.**

COMPASS

The compass is located at the helm station in direct view of the operator when navigating the boat. Follow the instructions in the compass manual included in the "Owners Packet" will help you make compensation adjustments to the compass.

OPERATION OF OPTIONAL FEATURES

AIR CONDITIONER

The control panel for the air conditioner is located in the galley cabinet. There are two vents in the cabin, one forward of the galley in the port V-berth and the other in the aft berth. The dockside power must be connected in order to use the air conditioner. For detailed instructions refer to the Operation and Maintenance Manual provided in your "Owner's Packet".

NOTICE

If your boat is removed from the water, leaving the seacock open will drain the water in the air conditioning system. This may cause an airlock in the air conditioner water pump in subsequent operation. To prohibit this drainage, simply close the air conditioner seacock. To winterize, leave the seacock open so the water can drain and then remove any remaining water by blowing pressurized air through the system. See the Operation and Maintenance Manual included in your "Owner's Packet" for additional winterizing information.

OUTRIGGERS

Outriggers allow you to spread the fishing lines trolled from your boat and decrease the chance of entanglement.

- ADVANTAGES

  Advantages of outriggers include: offering bait throughout a larger area behind the boat, placing bait out of the wake zone, automatic drop back following strikes (which allows for fish to completely accept bait) and a reduction in unnecessary twisting action characteristic of artificial bait.

- INSTRUCTIONS

  For installation and use of your outriggers reference the instruction sheet in your "Owner's Packet".

- CARE AND MAINTENANCE

  Outriggers should be washed with fresh water, mild soap and a soft cloth. Never use acidic cleaners on the outriggers.

  A periodic waxing is suggested if the outriggers are frequently exposed to salt water. The wax will provide a protective coating and seal the pores of the metal. A non-abrasive high quality marine or automotive wax is recommended. Before storage clean and wax your outriggers.

  During assembly grease all threads, bolts and tubes where one section is inserted into another. Disassemble and regrease all applicable surfaces on an annual basis.

AC INLET AND RECEPTACLE WIRING SCHEMATIC AND WARNING LABEL

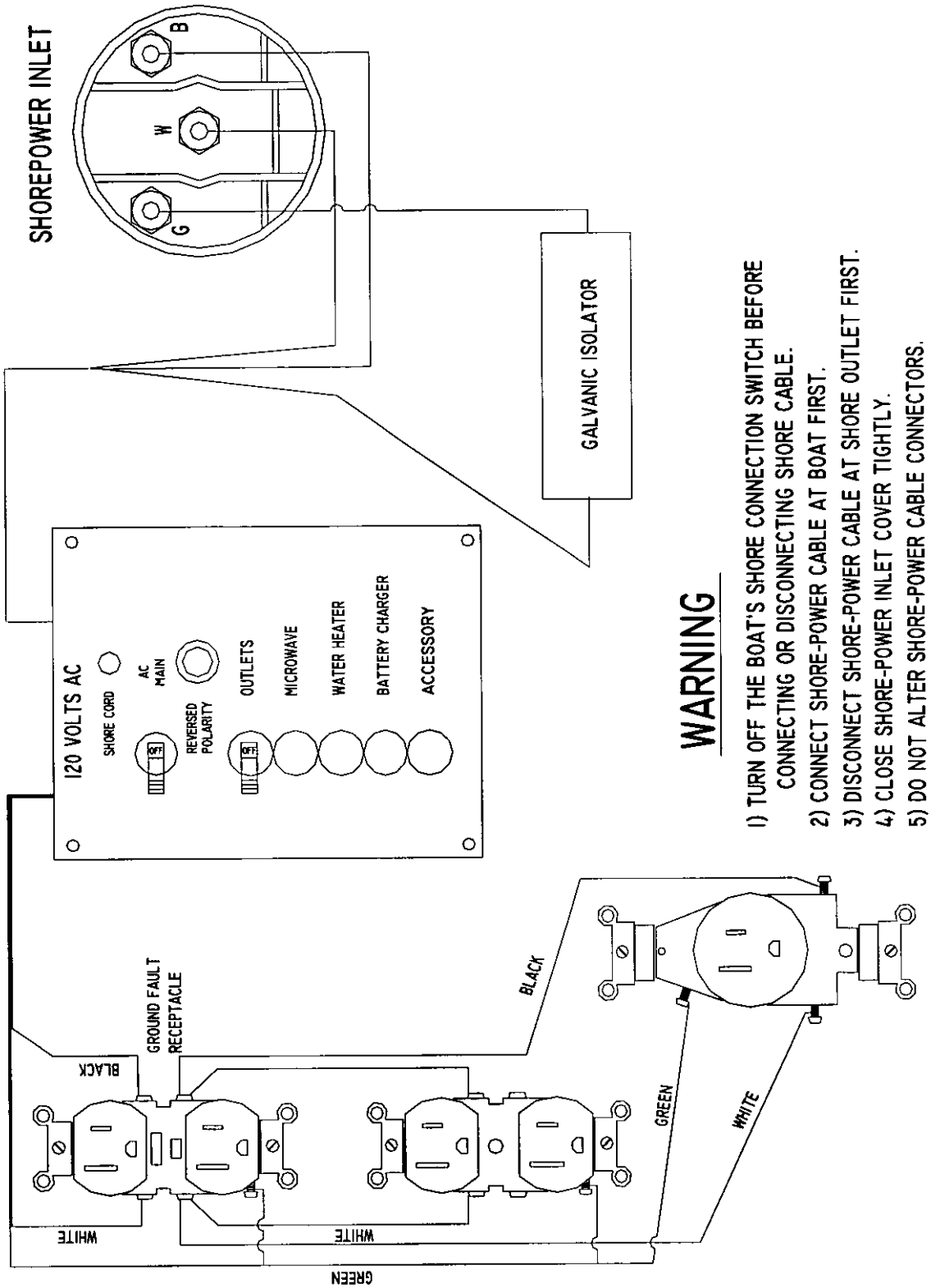

AC PANEL WIRING

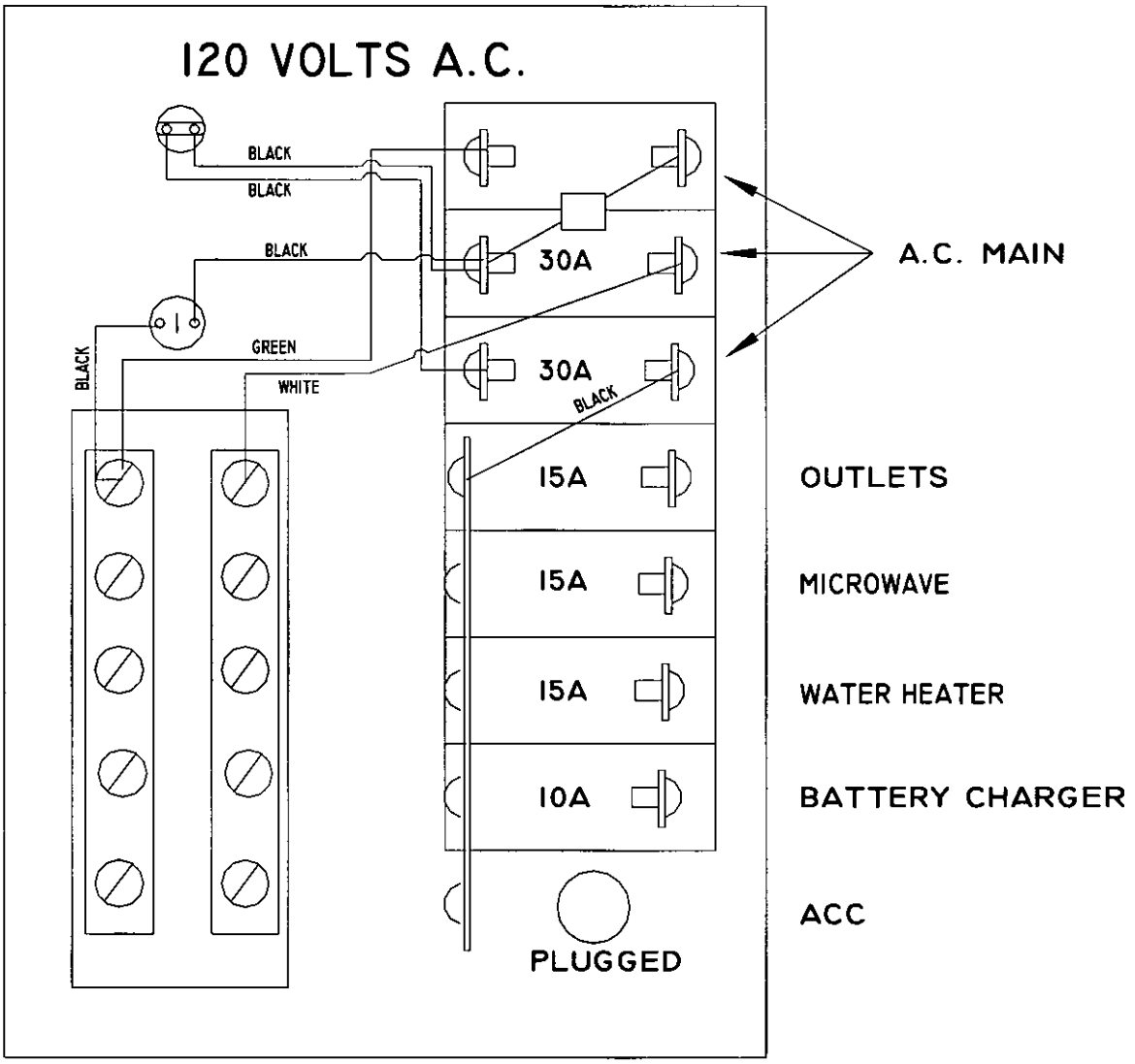

ACCESS PLATE AND RIGGING TUBE LOCATION

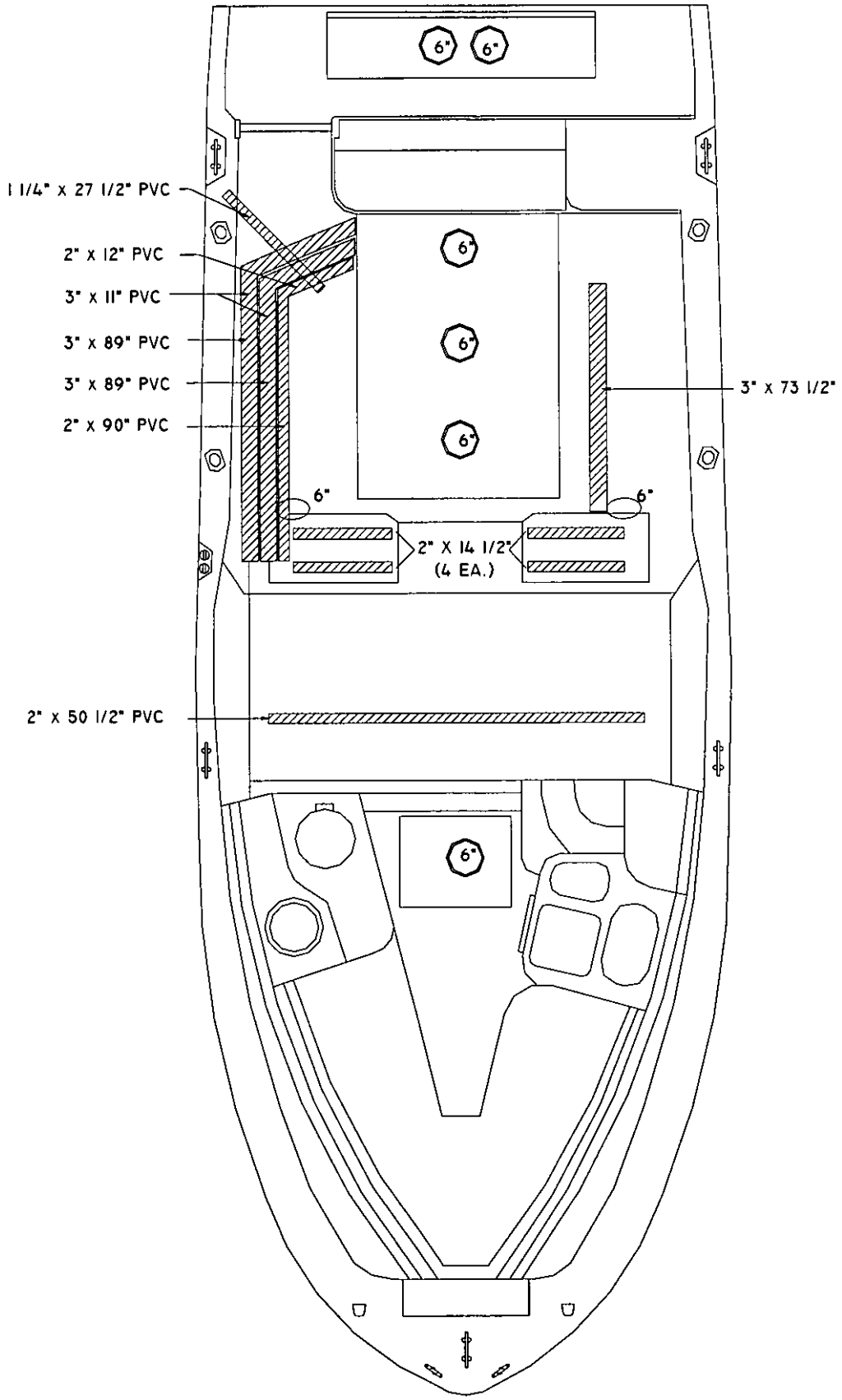

ACCESSORY WIRING

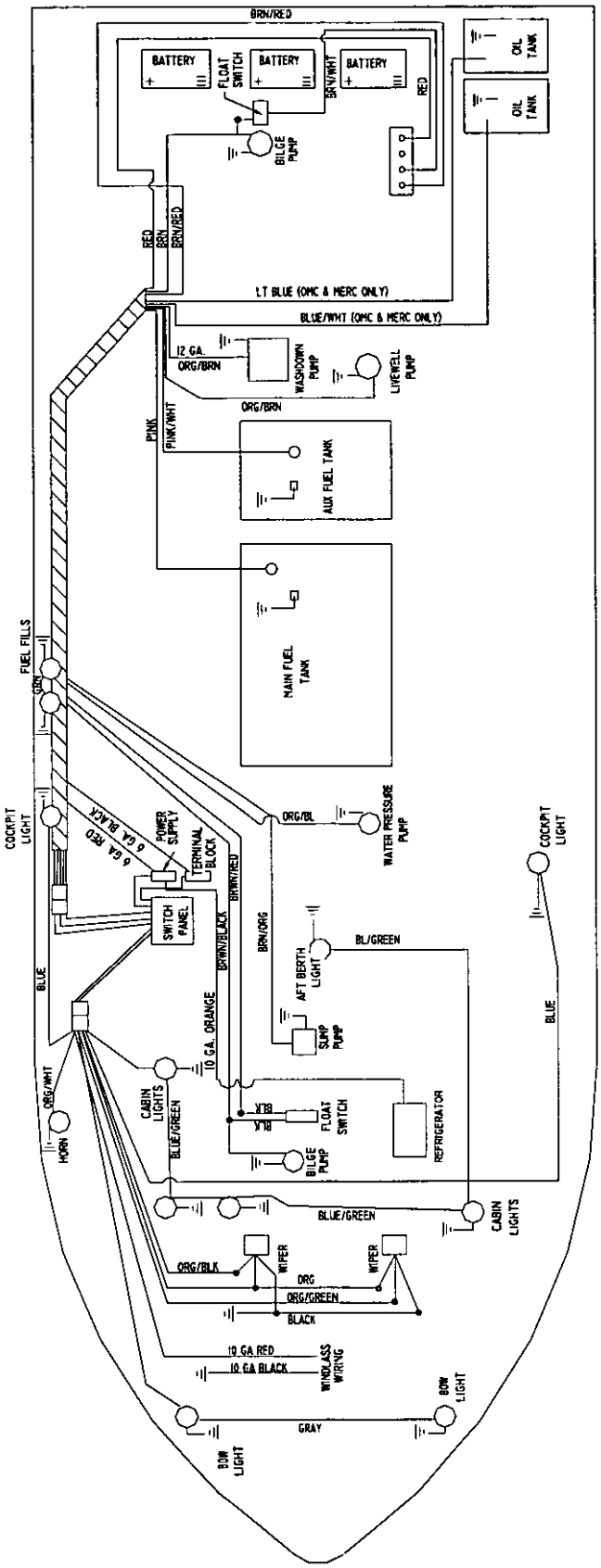

BATTERY SELECT WIRING

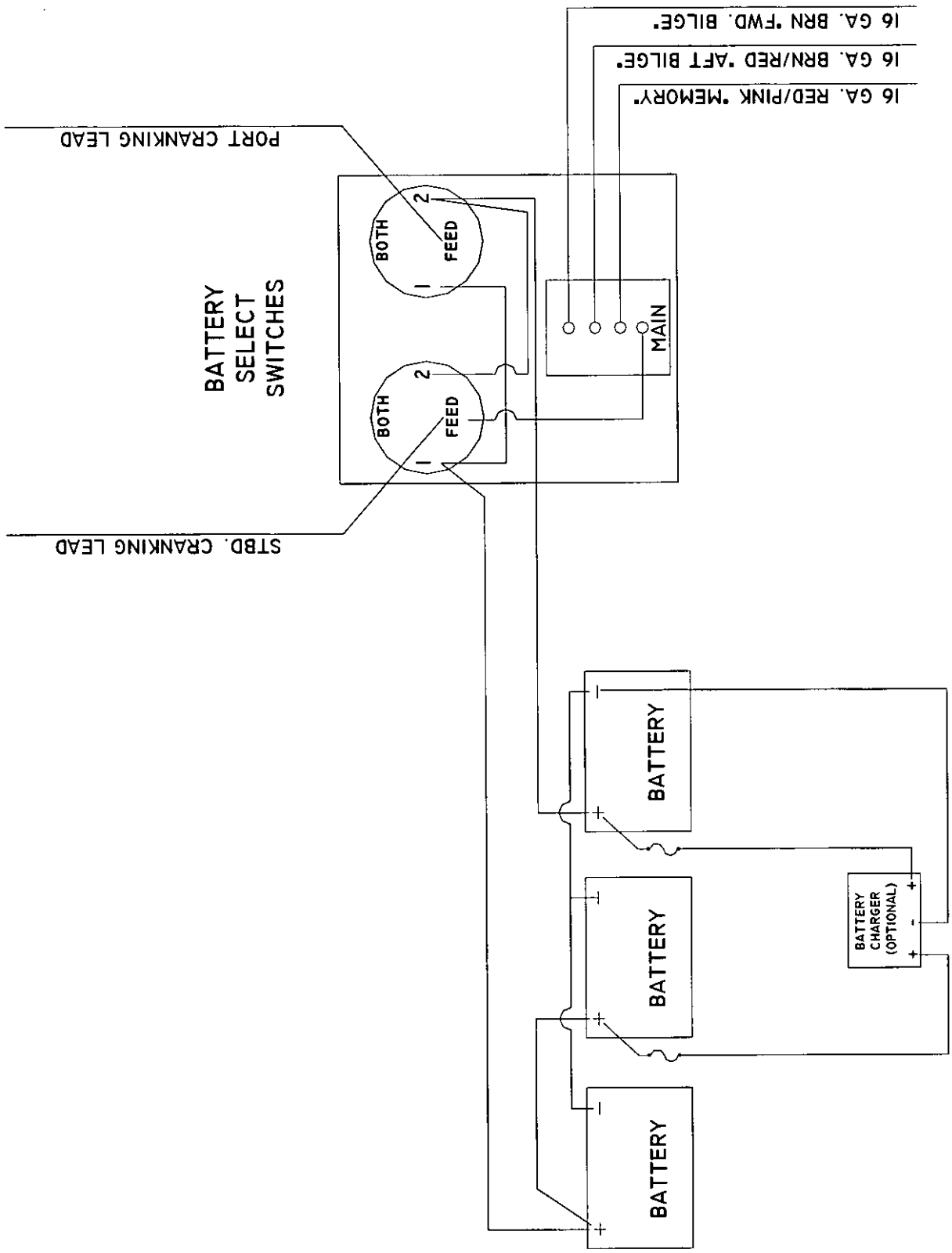

DOCKSIDE POWER WIRING

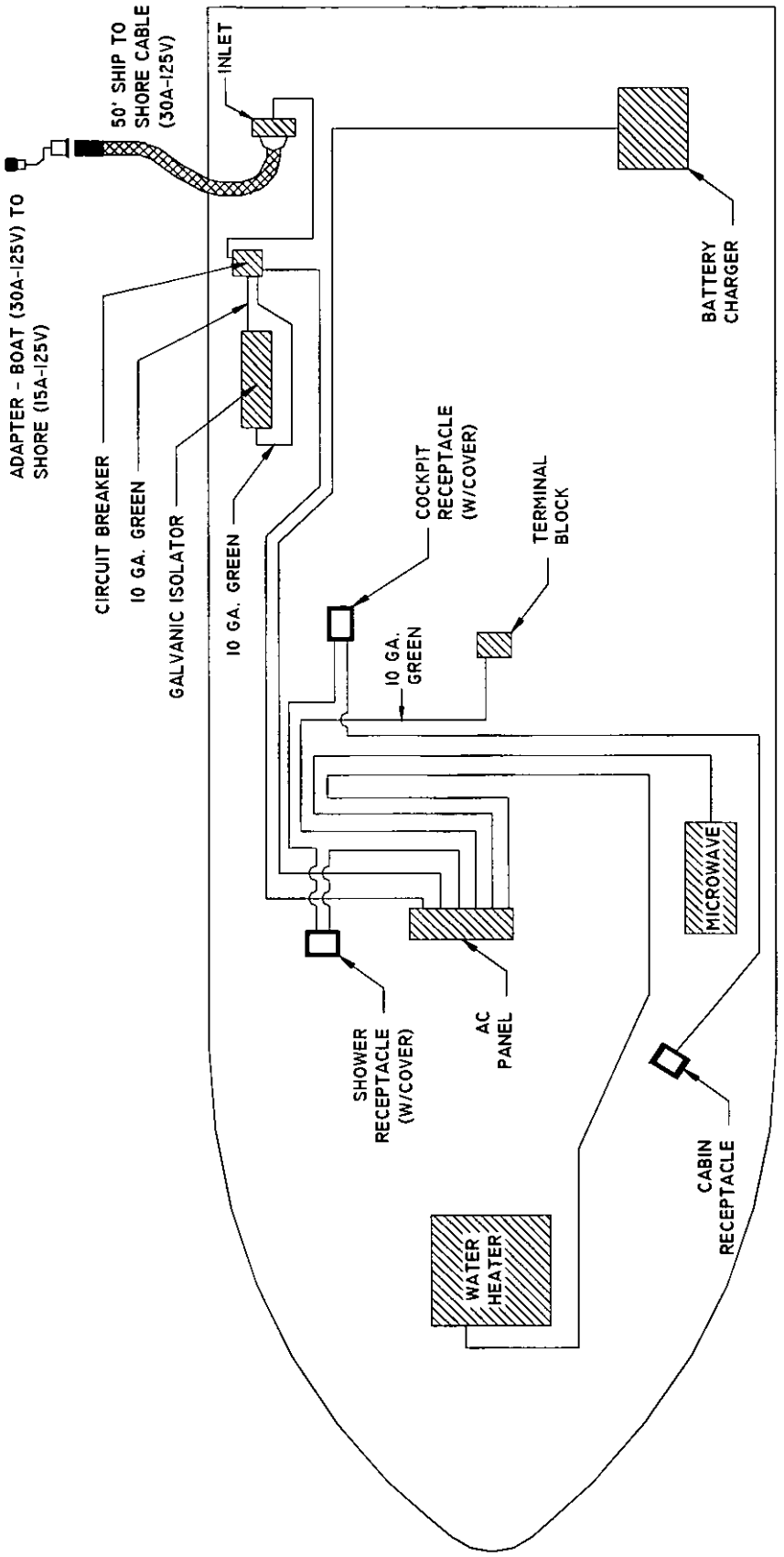

HARDTOP WIRING

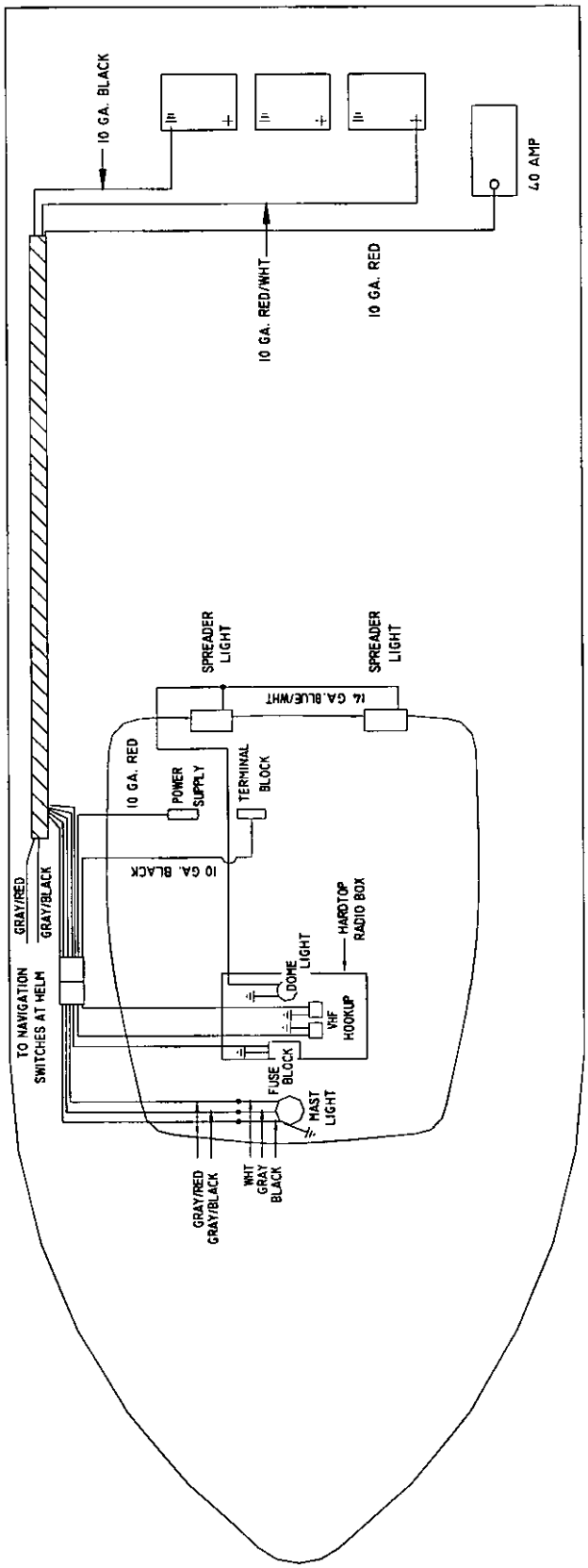

HEAD LAYOUT - MARINE

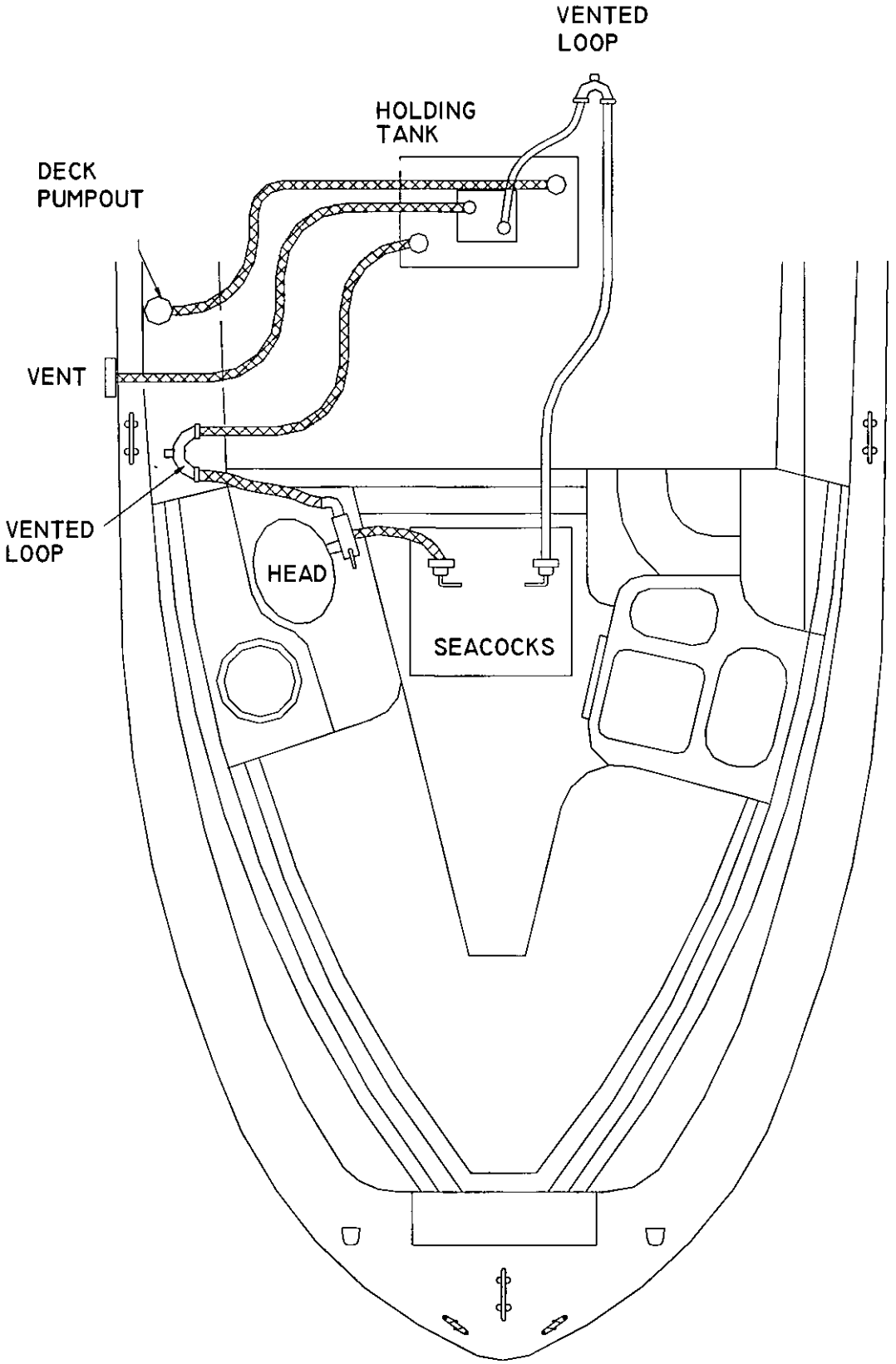

LABELS AND LOCATION

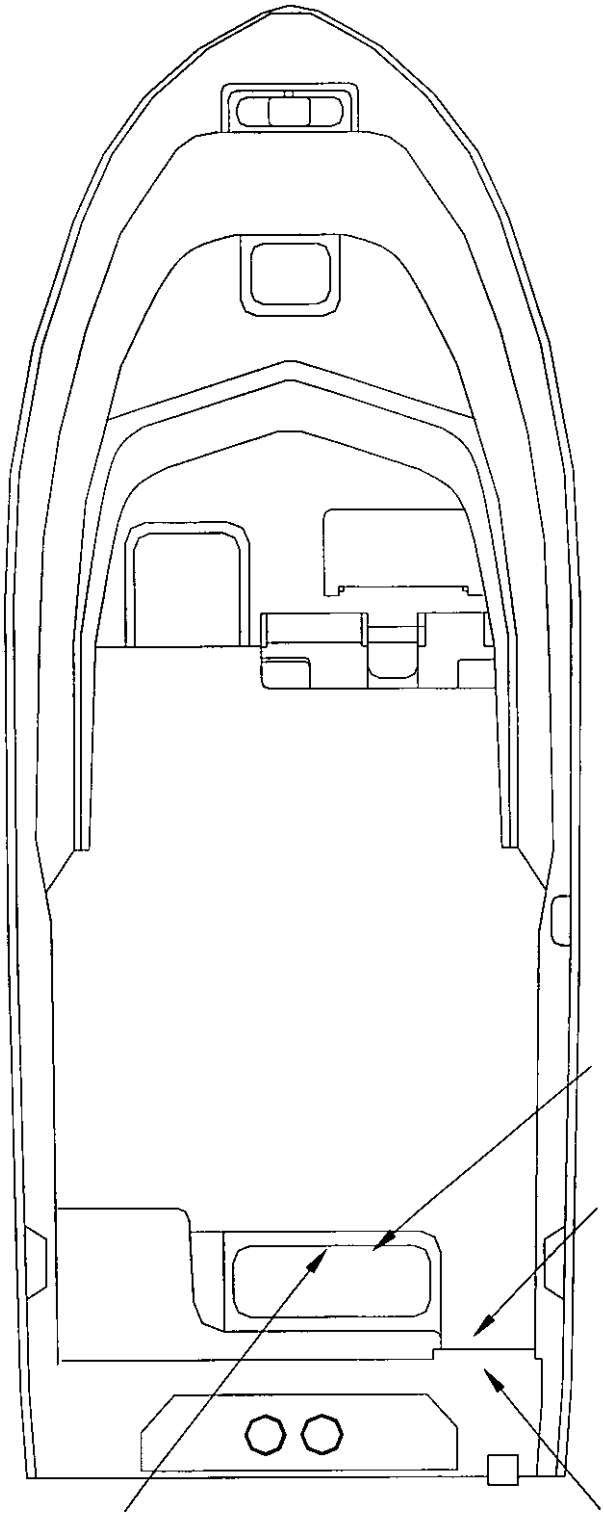

TO REORDER LABELS
PLEASE CONTACT
YOUR DEALERSHIP

NMMA WARNING NMMA
LEAKING FUEL IS A FIRE AND EXPLOSION HAZARD. INSPECT SYSTEM REGULARLY. EXAMINE FUEL SYSTEM FOR LEAKS OR CORROSION AT LEAST ANNUALLY.
NMMA 190/NO. 200

IN AFT RIGGING LID

WARNING
DOOR MUST BE CLOSED AND LOCKED WHILE ENGINES ARE IN OPERATION.

ON TRANSOM DOOR

FUEL SELECTOR VALVE
OFF
AUX — MAIN
WARNING
CHECK FOR LEAKING FUEL

IN RIGGING COMPARTMENT

DANGER
DO NOT BOARD
PLATFORM WITH
ENGINE(S) RUNNING.

ON SWIM PLATFORM WALL

LIVEWELL SYSTEM LAYOUT

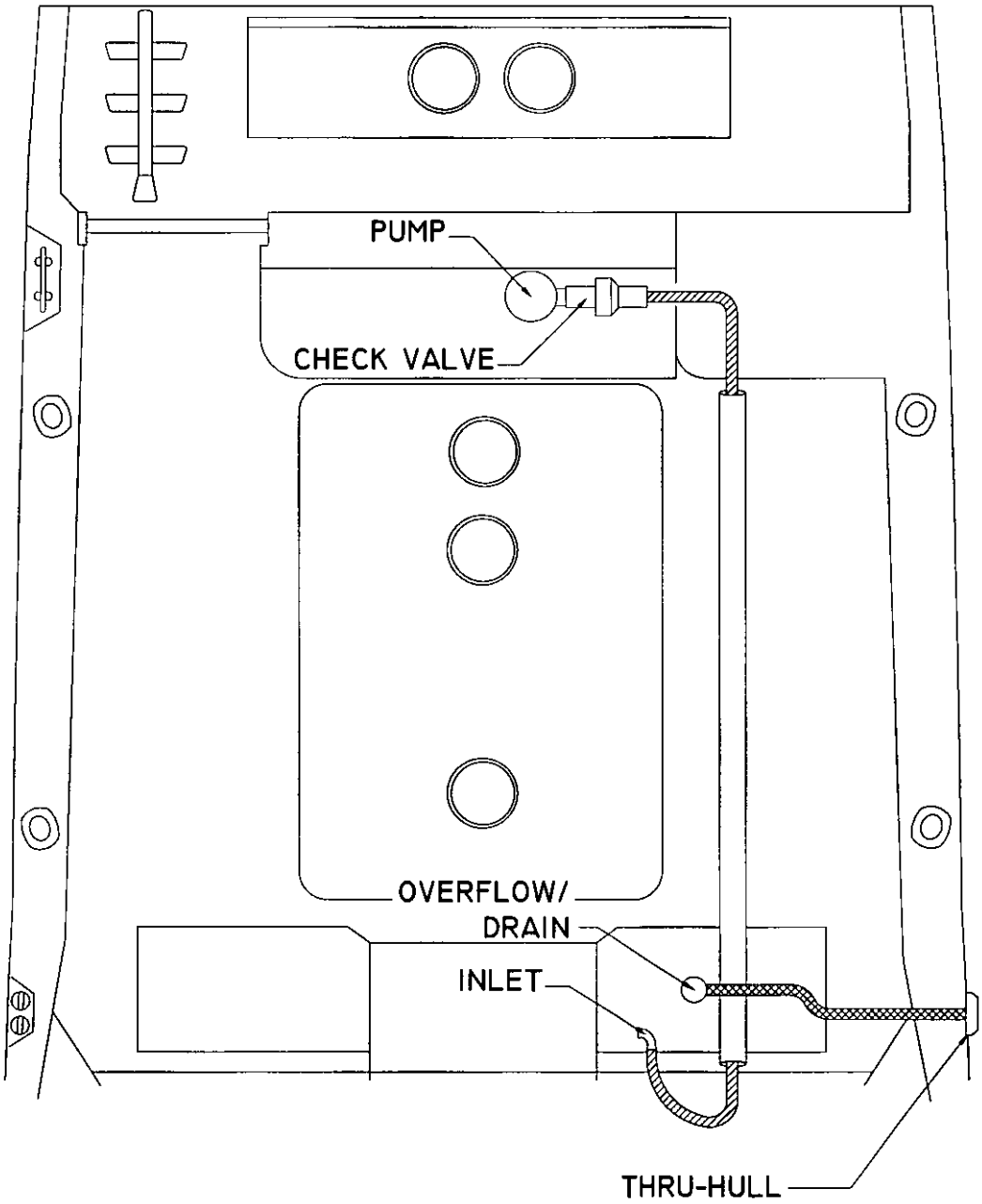

LIVEWELL/WASHDOWN SYSTEM

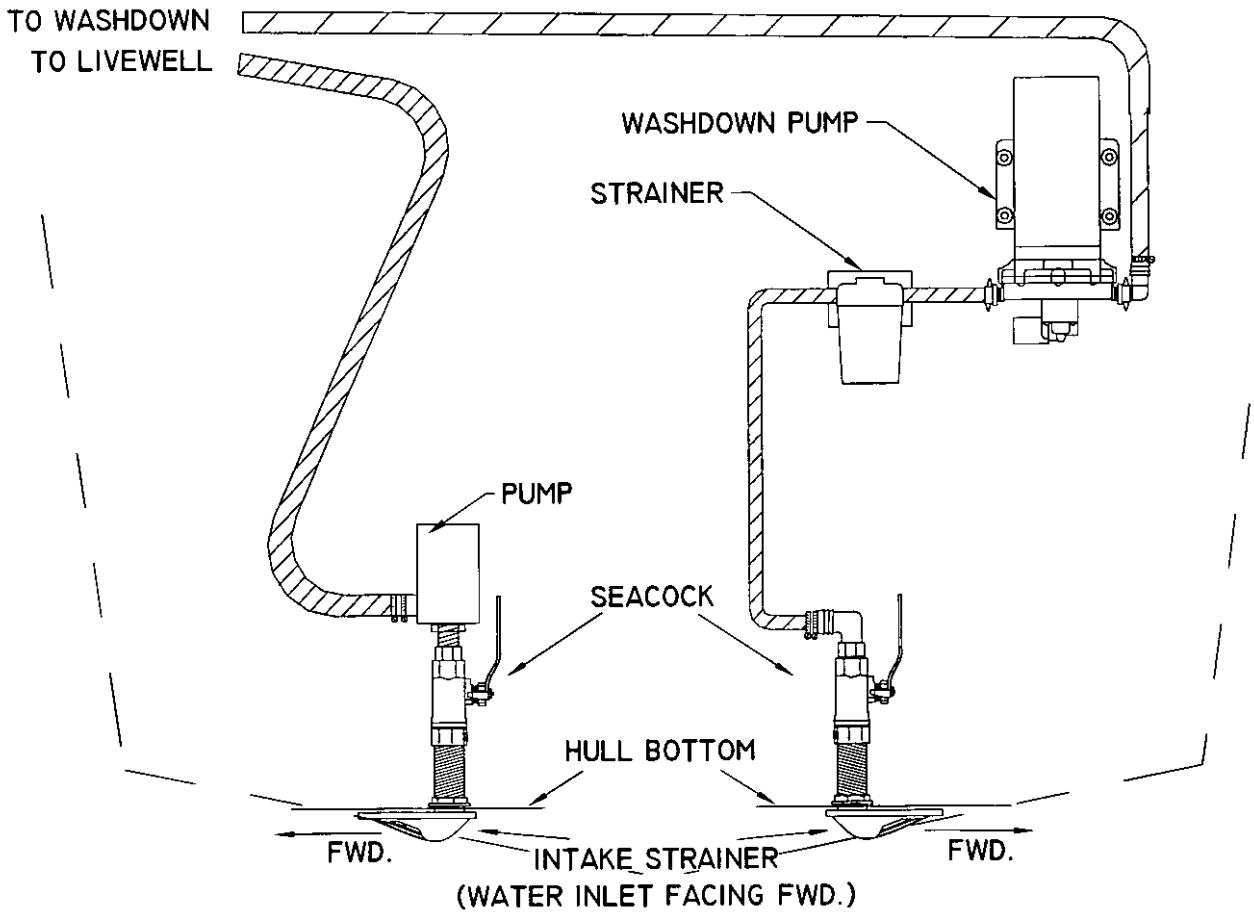

PRESSURIZED SHOWER/HOT WATER SYSTEM

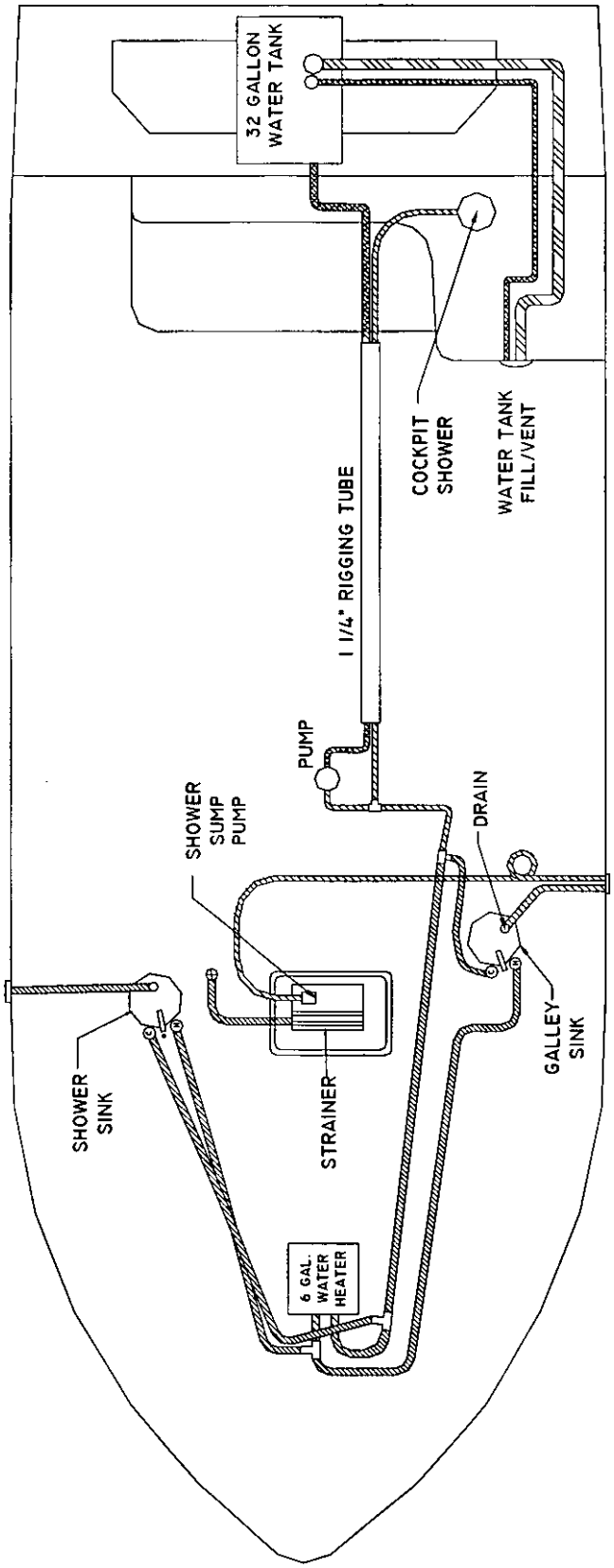

THRU HULL DETAIL
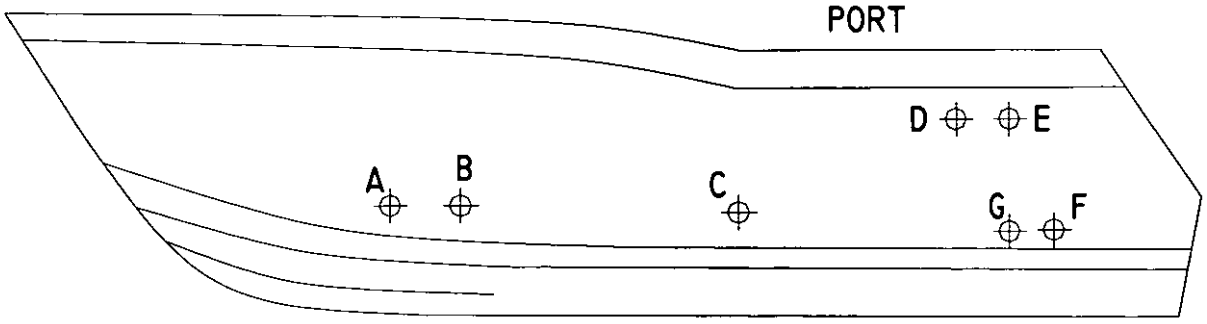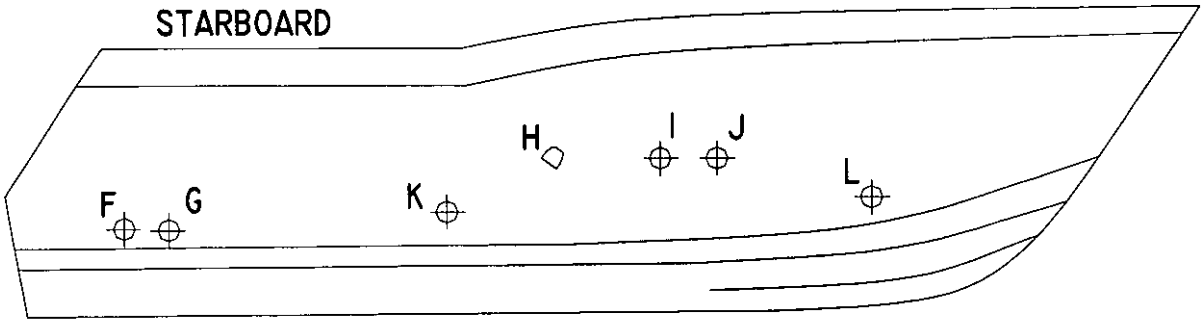
T-HULL	DESCRIPTION
A	GALLEY SINK / SHOWER SUMP
B	ICEBOX
C	LIVEWELL DRAIN / OVERFLOW
D	AFT BILGE
E	COCKPIT SINK / BOX DRAIN
F	SCUPPER
G	SCUPPER
H	MARINE HEAD VENT
I	OPTIONAL AIR CONDITION
J	FWD BILGE
K	FISHBOX
L	HEAD SINK